ENGLISH VERSION

WARNING!

Read this Operator's Manual carefully before using this machine. Failure to understand and follow the contents of this manual may result in electrical shock, fire and/or serious personal injury.

READ CAREFULLY

HIGH PRESSURE CLEANERS

RAPTOR™ G2

HIGH PRESSURE WATER CLEANER

Cold Water Petrol Driven

Record Serial Number below and retain product serial number which is located on nameplate.	
UNIT SERIAL NO.	
ENGINE SERIAL NO.	
PURCHASE DATE	

V3.0 - 2023

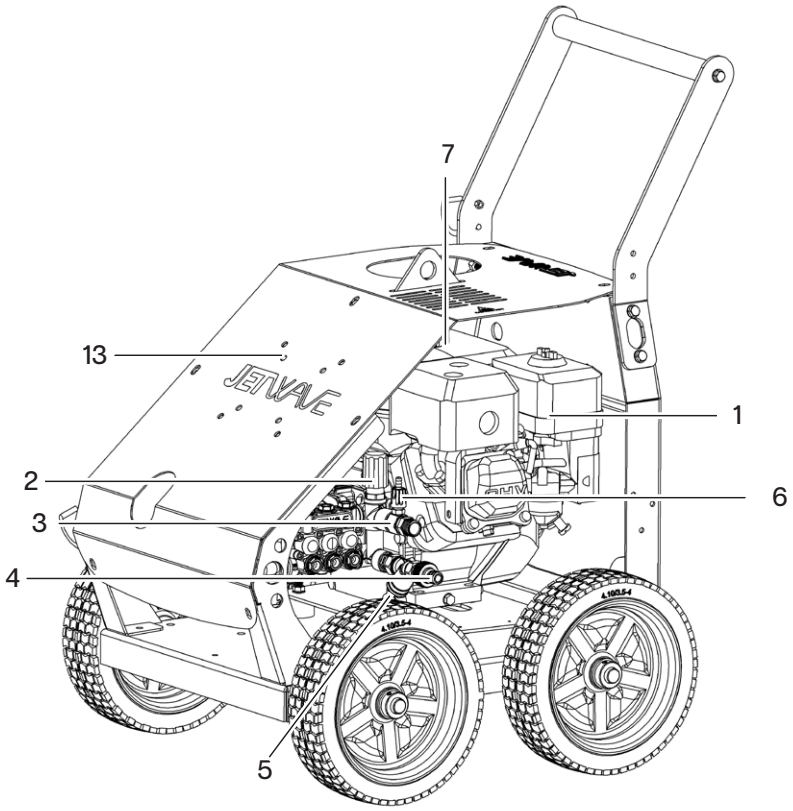
7
13
1
2
6
3
4
5

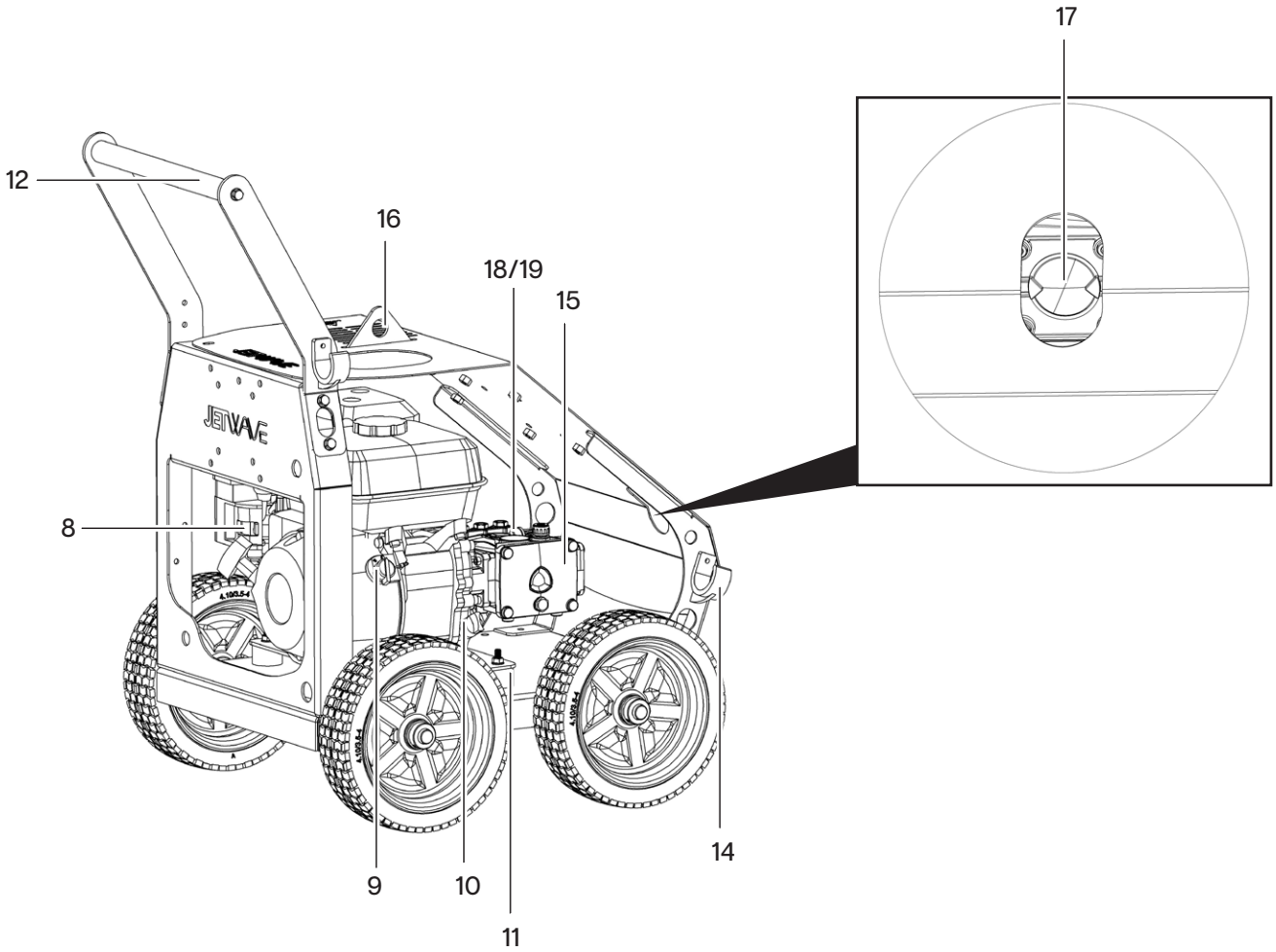
17
12
16
18/19
15
8
9
10
11
14

Raptor G2 Jnr

1. Engine
2. Unloader Valve
3. High Pressure Outlet (connection to hose coupling)
4. Low Pressure Inlet (for tap connection)
5. Water Inlet Filter
6. Chemical Injector
7. Fuel Fill Point
8. Engine Controls
9. Engine On/Off Switch
10. Engine Oil Dipstick
11. Anti-Vibration Plate
12. Trolley Handle
13. Hose Reel Mounting Holes
14. Accessory holder
15. Triplex Pump
16. Top Lift Point
17. Pump Oil Site glass
18. Safety valve
19. Thermal valve

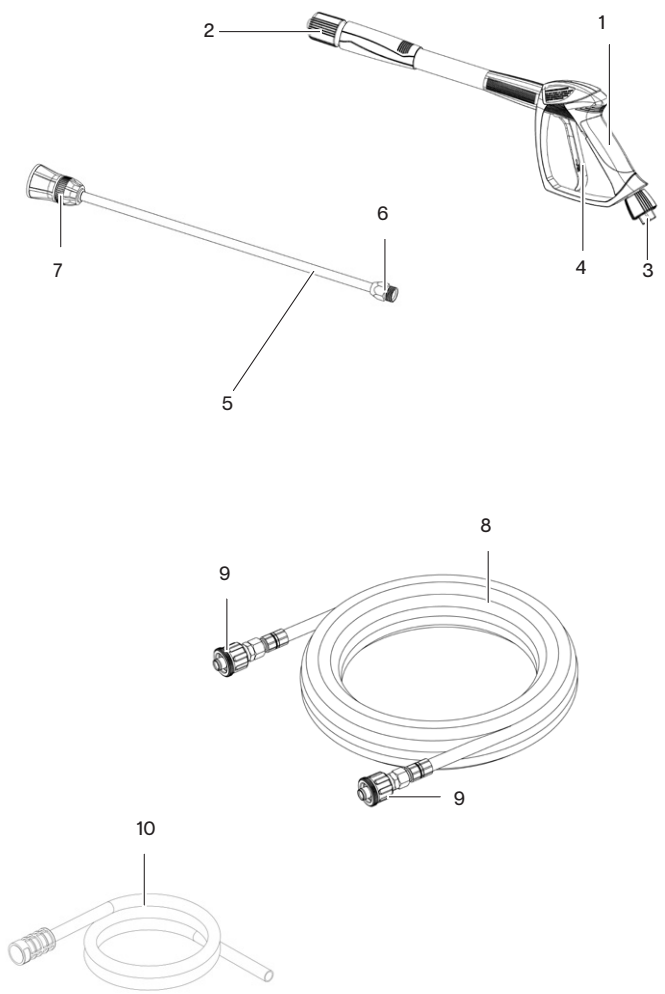

Standard Equipment

1. J5000 High Pressure Spray Gun
2. J5000 Half Lance M22 Nipple Connection
3. High Pressure Hose Connection
4. Gun Spray Trigger & Gun Lock Out
5. Raptor G2 Lance
6. M22 Connection to J5000 Half Lance
7. AN25 High & Low Pressure Nozzle w/ fixed fan
8. High Pressure Hose assembly
9. M22 Screw coupling connectors
10. Chemical pick up hose with strainer

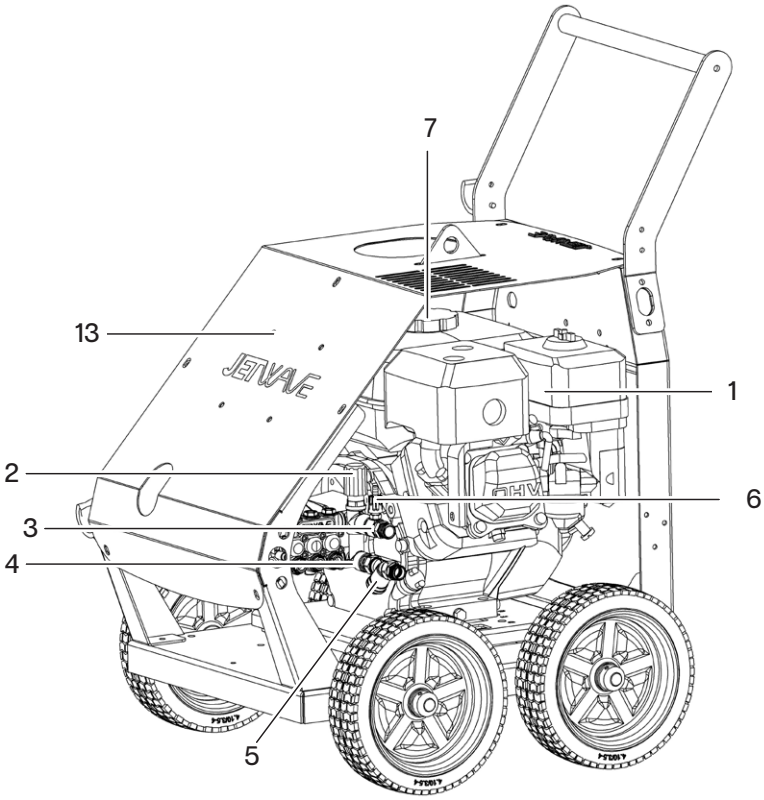
7
13
1
2
6
3
4
5

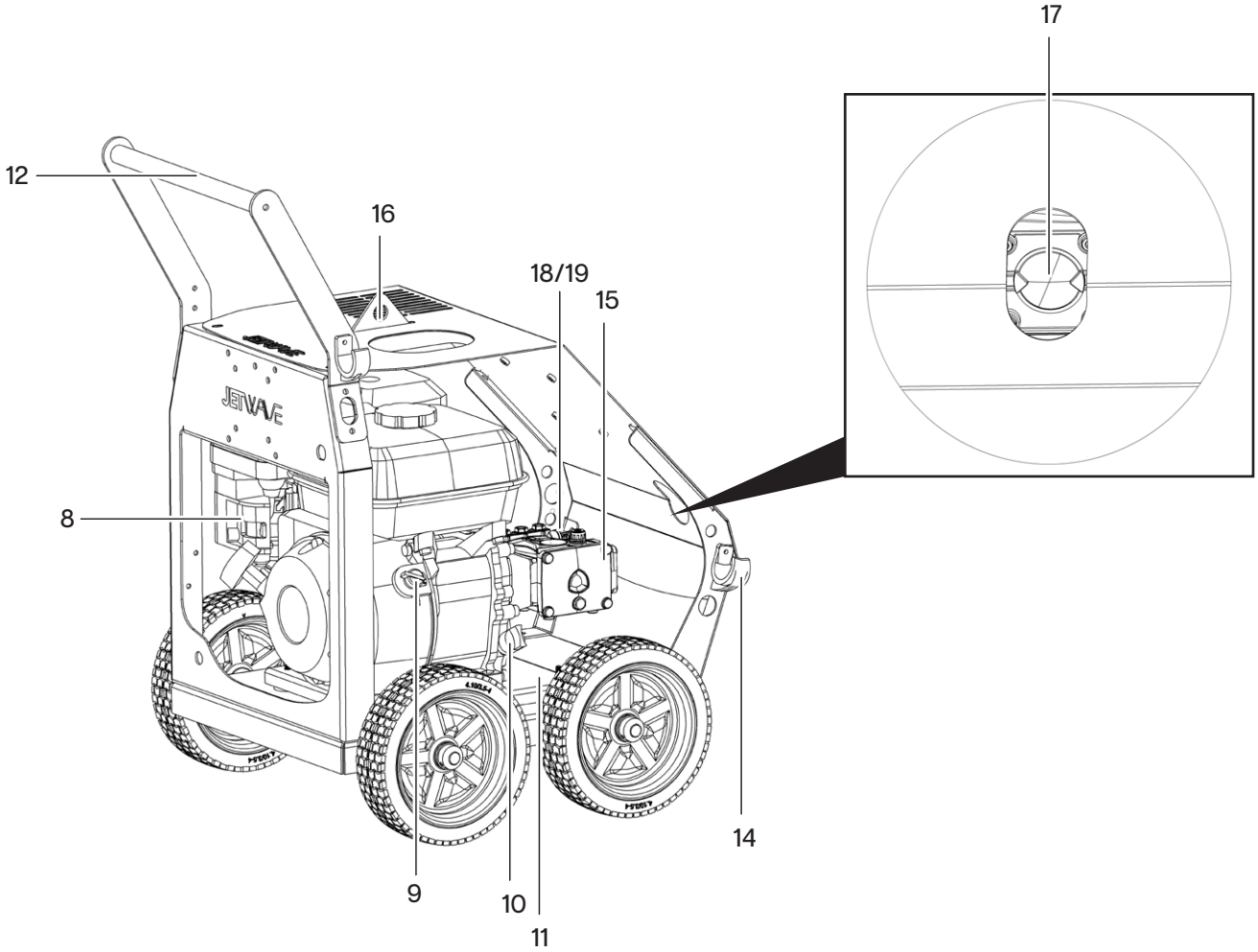
17
12
16
18/19
15
8
14
9
10
11

Raptor G2

1. Engine
2. Unloader Valve
3. High Pressure Outlet (connection to hose coupling)
4. Low Pressure Inlet (for tap connection)
5. Water Inlet Filter
6. Chemical Injector
7. Fuel Fill Point
8. Engine Controls
9. Engine On/Off Switch
10. Engine Oil Dipstick
11. Anti-Vibration Plate
12. Trolley Handle
13. Hose Reel Mounting Holes
14. Accessory holder
15. Triplex Pump
16. Top Lift Point
17. Pump Oil Site glass
18. Safety valve
19. Thermal valve

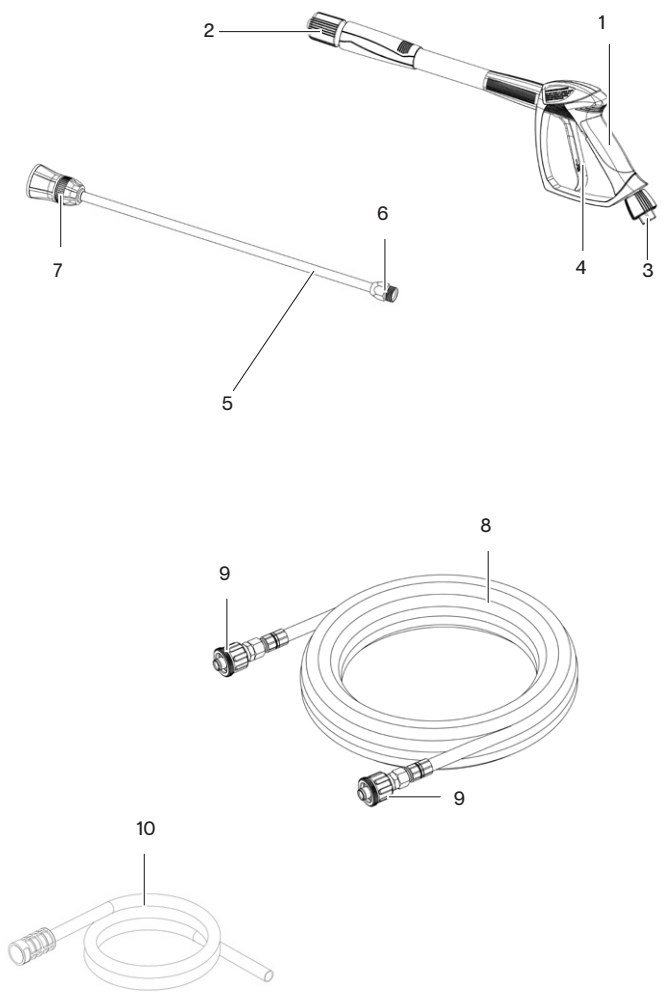

Standard Equipment

1. J5000 High Pressure Spray Gun
2. J5000 Half Lance M22 Nipple Connection
3. High Pressure Hose Connection
4. Gun Spray Trigger & Gun Lock Out
5. Raptor G2 Lance
6. M22 Connection to J5000 Half Lance
7. AN25 High & Low Pressure Nozzle w/ fixed fan
8. High Pressure Hose assembly
9. M22 Screw coupling connectors
10. Chemical pick up hose with strainer

Table of Contents 6
Safety Symbols

General Safety Rules 8
Work Area Safety
Personal Safety
Pressure Cleaner Use & Care
Service

High Pressure Cleaning Safety 8

Description, Specifications And Standard Equipment 9
Description
Specifications
Standard Equipment

Machine Assembly & Operation 10
Engine Oil
Pump
Wheels

Pre-Operation Inspection 10

Machine and Work Area Set-Up 11
Water Supply
Hose Setup

Operating Instructions 12
Pressure Washer Operation
Machine Shut Down
Hose Reel Brakde Adjustment
Transportation and Storage

Maintenance Instructions 14
Cleaning
Engine
Pump Lubrication/Maintenance
Preparing Pump for Cold Weather Storage
Machine Storage

Service And Repair 15
Disposal
Troubleshooting
Maintenance Log

*Original Instructions - English

Safety Symbols

In this operator's manual and on the product, safety symbols and signal words are used to communicate important safety information. This section is provided to improve understanding of these signal words and symbols.

This is the safety alert symbol. It is used to alert you to potential personal injury hazards. Obey all safety messages that follow this symbol to avoid possible injury or death.

DANGER indicates a hazardous situation which, if not avoided, will result in death or serious injury.

WARNING indicates a hazardous situation which, if not avoided, could result in death or serious injury.

CAUTION indicates a hazardous situation which, if not avoided, could result in minor or moderate injury.

NOTICE indicates information that relates to the protection NOTICE of property.

This symbol means read the operator's manual carefully before using the equipment to reduce the risk of injury. The operator's manual contains important information on the safe and proper operation of the equipment

This symbol means according to applicable regulations the machine must not be connected to a drinking/potable water supply without a system separator per EN 12729 Type BA. Water flowing through a system separator is considered non drinkable

This symbol indicates that high pressure jets can be dangerous if improperly used the jet must not be directed at persons animals, live electrical equipment or at the appliance itself.

This symbol indicates the risk of fire and explosion from gasoline or other sources causing burns and other injury.

This symbol indicates the risk of breathing carbon monoxide and causing nausea, fainting or death. Risk of poisoning do not breathe in exhaust fumes.

This symbol indicates the risk of loud noises from the machine, causing a risk to hearing impairment, always use proper ear protection, while working with the machine.

This symbol means always wear safety glasses with side shields or goggles when handling or using this equipment to reduce the risk of eye injury.

This symbol indicates the risk of high pressure water directed at body parts, causing skin puncture and injection injuries.

These symbols indicate a risk of burns and hot surfaces, be aware of hot components.

General Safety Rules

⚠ WARNING

Read and understand all instructions. Failure to follow all instructions listed below may result in electric shock, fire, and/or serious injury.

SAVE THESE INSTRUCTIONS!

Work Area Safety

- Keep work area clean and well lit.
- Keep bystanders, children, and visitors away while operating a pressure cleaner. Distractions can cause you to lose control.

Personal Safety

- Stay alert, watch what you are doing and use common sense when operating a pressure cleaner. Do not use a pressure cleaner while you are tired or under the influence of drugs, alcohol, or medication. A moment of inattention while operating pressure cleaners may result in serious personal injury.
- Dress properly. Do not wear loose clothing or jewelry.
- Contain long hair. Keep your hair, clothing and gloves away from moving parts. Loose clothes, jewelry, or long hair can be caught in moving parts.
- Do not overreach. Keep proper footing and balance at all times. This enables better control of the pressure cleaner in unexpected situations.
- Use safety equipment. Always wear eye protection.
- Dust mask, non-skid safety shoes, hard hat, or hearing protection must be used for appropriate conditions will reduce personal injuries.

Pressure Cleaner Use and Care

- Do not force the pressure cleaner.
- Store idle pressure cleaners out of the reach of children and other untrained persons. Pressure cleaners are dangerous in the hands of untrained users.
- Maintain pressure cleaners with care.
- Check for misalignment or binding of moving parts, breakage of parts and any other condition that may affect the pressure cleaners operation. If damaged, have the pressure cleaner serviced before using. Many accidents are caused by poorly maintained pressure cleaners.

Use only accessories that are recommended by the manufacturer for your model and pressure & flow rated accordingly.

Service

- Pressure cleaner service must be performed only by qualified repair personnel. Service or maintenance performed by unqualified personnel could result in a risk of injury.
- When servicing a pressure cleaner, use only genuine replacement parts. Follow instructions in the Maintenance section of this manual. Use of unauthorized parts or failure to follow Maintenance Instructions may create a risk of electrical shock or injury.

High Pressure Cleaning Safety

⚠ WARNING

This section contains important safety information that is specific to this pressure cleaner.

Read these precautions carefully before using this drain Cleaning Machine to re duce the risk of electrical shock or other serious injury.

SAVE ALL WARNINGS AND INSTRUCTIONS FOR FUTURE REFERENCE!

Keep this manual with machine for use by the operator.

- Never operate the unit without a pressure control mechanism Hoses can whip, causing striking injuries and spray can penetrate skin and cause serious injury.
- High pressure water can inject under skin resulting in serious injury including amputation. Do not direct spray at people or animals.
- Do not operate unit above the rated working pressure or 60°C (inlet water temperature). This increases the risk of injury, including burns, and damage to the unit.
- One person must control the high pressure cleaning process and water flow.
- Always use appropriate personal protective equipment while handling and using high pressure cleaning equipment. Appropriate personal protective equipment (PPE) includes safety glasses and gloves, and may also include equipment such as latex or rubber gloves, face shields, goggles, protective clothing, respirators, head protection, hearing protection and steel toed footwear.
- Practice good hygiene. Use hot soapy water to wash hands and other body parts exposed to drain contents after handling or using drain cleaning equipment.
- Do not eat or smoke while operating or handling high pressure cleaning equipment. This will help prevent contamination with toxic or infectious material.

- Do not spray toxic or flammable liquids. This will reduce the risk of burns, fire, explosion or other injury.
- Gasoline and its vapors are highly flammable and explosive. See engine manual for precautions to reduce the risk of burns, explosions and serious injury while handling and using gasoline.
- Engines produce carbon monoxide, a colorless, odorless poison gas. Breathing carbon monoxide can cause nausea, fainting or death. Do not start and run engine in an enclosed area, even if doors and windows are open. Only operate outside.
- Never attempt to refuel the unit whilst engine is running. Do not spill fuel on or near exhaust take extra care in the refueling process as vapors or liquid can combust due to heat.
- Hot surfaces can cause burns and fire. Keep body parts and flammable material away from hot surfaces.
- Read and understand this manual, the engine manual and the warnings and instructions for all equipment and material being used with this tool before operating. Failure to follow all warnings and instructions may result in property damage and/or serious injury.
- Follow all applicable workplace health and safety regulations and guidelines concerning the use of this equipment.
- Read and understand Australia/New Zealand standard AS/NZS4233.1:13 High Pressure Water Jetting Systems Part 1: Safe Operation & Maintenance.

If you have any question concerning this Jetwave® product:

– Contact your local Jetwave® distributor.

– Visit jetwave.com.au/find-a-dealer to find your local Jetwave contact point.

Description, Specifications and Standard equipment

Description

The Jetwave® Raptor™ G2 engine powered High Pressure Cleaner machine is a portable unit designed to use a combination of water pressure and flow to clean different surfaces from dirt, grease, & grime. Water is pumped through the high pressure plunger pump at increased pressure and flow allowing water to be used at such high pressure to remove dirt and grime from surfaces. The Raptor™ G2 High Pressure Cleaner is equipped with a gasoline HONDA™ engine to drive the triplex plunger pump.

Figure.1 - Raptor G2 & Raptor G2 Jnr High Pressure Cleaners

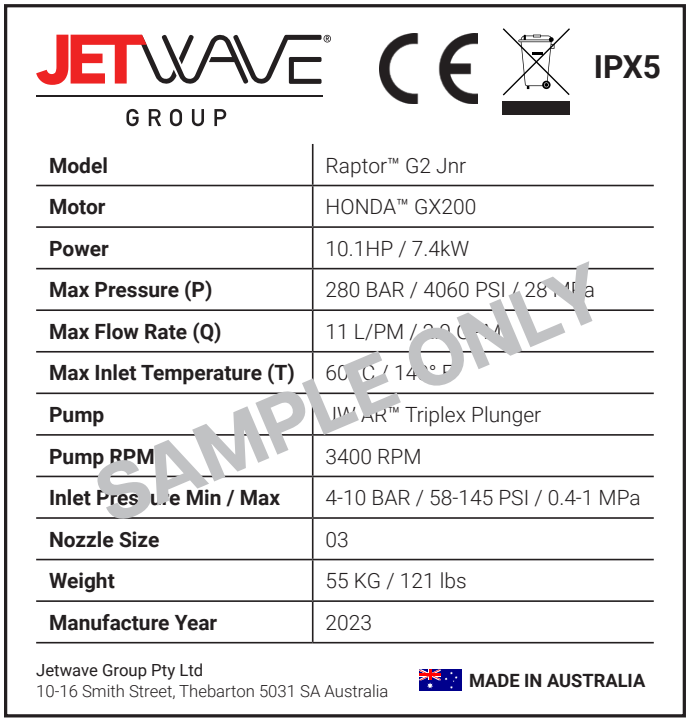

JETWAVE GROUP IPX5

Model	Raptor™ G2 Jnr
Motor	HONDA™ GX200
Power	10.1HP / 7.4kW
Max Pressure (P)	280 BAR / 4060 PSI / 28 MPa
Max Flow Rate (Q)	11 L/PM / [illegible]
Max Inlet Temperature (T)	60 °C / 14[illegible] °F
Pump	[illegible] AR™ Triplex Plunger
Pump RPM	3400 RPM
Inlet Pressure Min / Max	4-10 BAR / 58-145 PSI / 0.4-1 MPa
Nozzle Size	03
Weight	55 KG / 121 lbs
Manufacture Year	2023

Jetwave Group Pty Ltd
10-16 Smith Street, Thebarton 5031 SA Australia

MADE IN AUSTRALIA

SAMPLE ONLY

Figure.2 - Raptor G2 Data Plate Example

Standard equipment

A Jetwave Raptor™ G2 High Pressure Cleaner comes with:

- J5000 High Pressure Gun with swivel
- Single lance with variable pressure control
- 15m of DWB 3/8" high pressure hose
- In-line chemical injector with strainer
- Engine Operator's Manual
- Operator's Manual
- Trolley Kit
- (Optional) Hose Reel

See the Jetwave® catalog for specific equipment supplied with each catalog number.

The machine serial number is located on the frame. The first letter & digits indicate the year and month of the manufacture. (G = 2023 (Year), 4 = April (Month)).

NOTICE This machine is made high pressure water clean. If properly used it should not damage a surfaces that is in good condition and properly designed, constructed and maintained. If the surface is in poor condition or not properly designed, constructed or maintained, the water cleaning process may not be effective or could cause damage to the surface. The best way to determine the condition of a surface before cleaning is through visual inspection. Improper use of this pressure cleaner can damage the unit and the surface. This machine may not clear all substrate debris.

Machine Assembly

⚠ WARNING

To prevent serious injury during use and prevent machine damage, follow these procedures for proper assembly.

Engine Oil

NOTICE The unit is shipped with oil in the engine. Operating the engine with low or no oil will result in engine failure. See supplied engine operator's manual for specific information on checking oil, adding oil and oil selection.

Pump

The unit is shipped with oil in the pump.
Check oil level (ensure half way on sight-glasses) per Maintenance section.

Wheels

Typically the unit is boxed and shipped with wheels assembled. To assemble the wheels, slide wheels on each side axel and proceed to install locking collar each side with 4mm allen key tool.

Pre-Operation Inspection

⚠ WARNING

Before each use, inspect your pressure cleaner and correct any problems to reduce the risk of serious injury from high pressure water and other causes and prevent unit damage. Always wear appropriate safety equipment, when inspecting your unit.

1. Make sure that the engine switch is in the OFF position.

2. Clean any oil, grease or dirt from the equipment, including the handles and controls. This aids inspection and helps prevent the machine or control from slipping from your grip.

3. Inspect the high pressure cleaner and accessories for the following:
   - Proper assembly and completeness.
   - Broken, worn, missing, misaligned, binding or loose parts.
   - Presence and readability of the warning labels. (See Figure 3A&B.)
   - Any other condition which may prevent the safe and normal operation.

If any problems are found, do not use the unit until the problems are corrected.

Figure.3 - Raptor G2 Warning Labels

Figure.3A - Raptor G2 Warning Labels

Figure.4 - Raptor G2 Water Filter

4. Clean water filter (Figure 4). Unscrew the brass cover from bottom of the filter and remove and clean the mesh filter. Dirt and debris can restrict the water flow to the pump and cause performance issues.

5. Inspect the pressure cleaner nozzle orifices for any damage or blockage. Blockages can be cleaned with a nozzle cleaning tool. Use care not to enlarge nozzle orifices while cleaning. Damaged nozzles or nozzles with enlarged orifices can decrease unit performance and should be replaced.

6. Inspect the hoses, connectors and fittings for wear and damage. If there are any kinks, cracks, breaks or wear through the outer jacket of the hose or other damage, do not use the hose. Damaged hoses can burst or leak high pressure water and cause serious injury. Replacement hoses and fitting should be rated at or higher than the unit pressure rating.

7. Inspect and maintain the engine per the engine operator's manual.

8. Check engine fuel level. If needed, add unleaded gasoline for. See engine operator's manual for requirements. Use caution when handling fuel. Work in a well ventilated area. **Never fill the tank while unit is running**, do not overfill tank and do not spill fuel. Make sure tank cap is securely closed.

9. Check the oil level in the pump through the sight glass and add oil if needed (see Maintenance Instructions section). Inspect Engine as directed in the engine operator's manual.

Machine and Work Area Set-up

⚠ WARNING

Always wear safety glasses, gloves and other appropriate protective equipment when setting up your pressure cleaner. Rubber soled, non-slip shoes can help prevent slipping on wet surfaces.
Engines produce carbon monoxide, a colorless, odorless poison gas. Breathing carbon monoxide can cause nausea, fainting or death. Do not start and run engine in an enclosed area, even if doors and windows are open. Only operate outside.

Set-up the unit and work area according to these procedures to reduce the risk of injury from high pressure water, chemical burns, infections, carbon monoxide and other causes, and prevent unit damage.

1. Check work area for:
   - Adequate lighting.
   - Flammable liquids, vapors or dust that may ignite. If present, do not work in area until sources have been identified and corrected. The machine is not explosion proof and can cause sparks.
   - Clear, level, stable dry place for machine and operator.
   - If needed, remove the water from the work area. Wood or other coverings may need to be put down.
   - Unit location that is in a well ventilated outdoor area. Do not place the unit indoors, even with doors and windows open. Unit can be located remotely from the point of use.
   - Suitable water supply. Clear path to transport the unit to the set up location.
2. Inspect the surface to be cleaned, and make sure no materials or elements are in the way of the unit.
3. Determine the correct equipment for the application.
4. Make sure all equipment has been properly inspected.
5. Evaluate the work area and determine if any barriers are needed to keep bystanders away. Bystanders can distract the operator. If working near traffic, erect cones, signs or other barriers to alert drivers.
6. Take the unit to the well-ventilated outdoor work area along the clear path. See Transportation Section. Be aware of possible slip hazards. Wear appropriate footwear to help prevent slips.

Water Supply

WARNING: This high pressure cleaner is only allowed to be connected with the drinking water mains, when an appropriate backflow preventer has been installed, as per AS/NZS 60335.2.79. Follow all local standards and regulations applicable to water connection.

According to the applicable regulation, the appliance must never be used on the drinking water supply without a system separator. Use a suitable system separator as per AS/NZS 60335.2.79. Water flowing through a system separator is considered non-drinkable

Run a hose from the water source to the unit water inlet. Use the largest diameter, shortest length hose possible. A 1/2" I.D. Inlet hose is the minimum recommended size.

Dirt and debris in the water supply can cause excess pump wear, clog the unit filter, nozzles and reduce performance.

Do not use water from ponds, lakes or other sources that may be contaminated.

Warm water can be used for improved cleaning. Do not use water hotter than 60°C. When using warm water, use appropriate personal protective equipment to reduce the risk of burns.

When using in cold weather, use precautions to prevent water from freezing in the pump. This can damage the pump.

Hose Set-Up

Use care when routing hoses. Routing hoses over rough surfaces, sharp edges, crossing hoses, etc. can damage the hose jacket. Keeping the unit hose on the reel(s) will help to minimize hose damage.

Figure.5 - Raptor G2 Hose Reel Mounting

Operating Instructions

⚠ CAUTION

Always wear eye protection to protect your eyes against dirt and other foreign objects. Always wear appropriate personal protective equipment for the work environment.

Never operate the unit without the hose attached to a spray gun. Hose can whip, causing striking injuries and spray can penetrate skin and cause serious injury.

High pressure fluid can inject under skin resulting in serious injury, including amputation. do not direct spray at people or animals. do not operate unit above pressure rating or 60°C (inlet water temperature). This increases the risk of injury, including burns, and damage to the unit. One person must control the unit process and water flow.

Always use appropriate personal protective equipment while handling and using high pressure cleaning equipment. Appropriate personal protective equipment always includes safety glasses and gloves, and may also include equipment such as latex or rubber gloves, face shields, goggles, protective clothing, respirators, and steel toed footwear.

Follow operating instructions to reduce the risk of injury from whipping hoses, high pressure liquid injection, carbon monoxide and other causes.

1. Make sure that machine and work area is properly set up and that the work area is free of bystanders and other distractions.
2. Attach the gun to the high pressure hose via coupling system.
3. Attach the hose to the high pressure pump outlet.

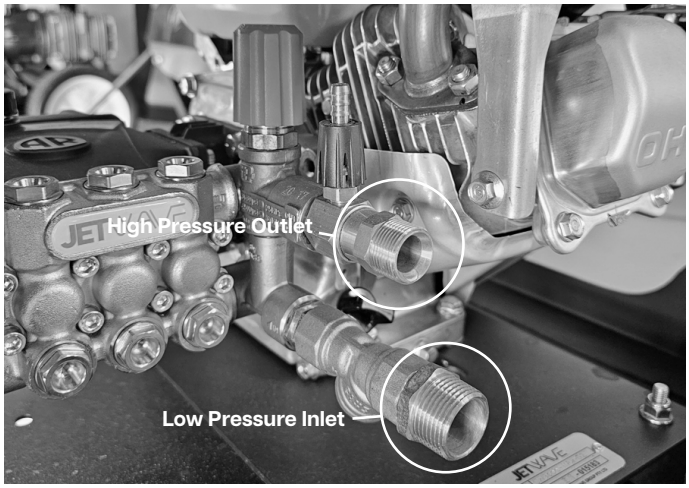

Figure.6 - Raptor G2 High & Low Pressure Outlet/Inlet

4. **HONDA GX200 & GX390 STARTING (Pull Start)**
5. Turn the unit ignition switch to the **ON** position.

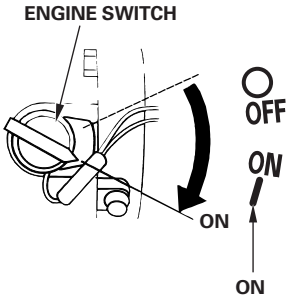

6. Move the fuel valve lever to the **ON** position

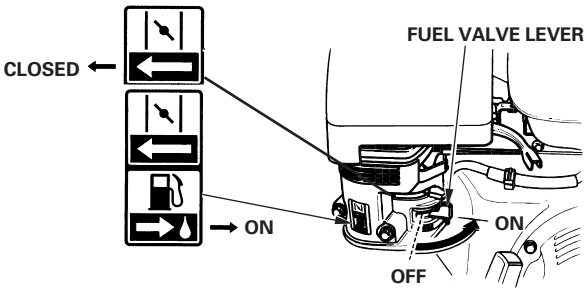

7. **To cold start the engine**, move the choke lever to the **CLOSED** position

8. Move the throttle level to the MAX position

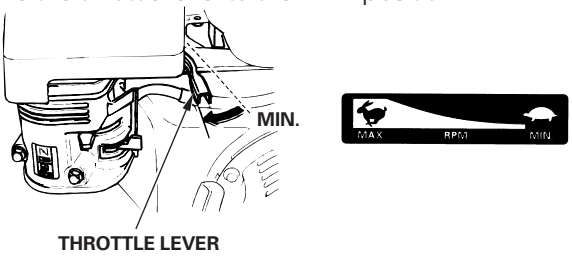

9. Ensure your holding the gun and pulling on the trrigger when when starting engine.
10. Pull the starter grip lightly until you feel resistance, then pull briskly in the direction of the arrow as shown below.

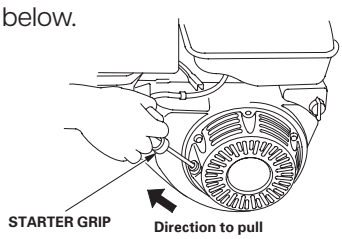

11. With the machine running proceed to press trigger on the gun to start pressure cleaning, Use care when using the pressure washer. Holding the nozzle too close to a surface can damage it. Test a small, inconspicuous area to confirm the settings work as desired. Never direct the wash wand at people. High pressure fluid can inject under skin resulting in serious injury. Never direct wash wand at electrical equipment or wiring to reduce the risk of electrical shock.
12. CAUTION: Do not leave the machine running in bypass mode for long periods of time as it may damage the seals on the triplex pump, bypass mode is when the trigger is not pulled and water is recuculating back to the pump head.

Machine Shut Down Procedure

1. When high pressure cleaning task is complete, release high pressure trigger.
2. Return to the unit controls.
3. Idle down unit RPMs via throttle control
4. Proceed to power down the engine via ignition switch.
5. CAUTION: Release any pressure from the line by engaging the high pressure gun trigger. Never leave a machine pressurised as it may cause injury.
6. Turn water supply OFF.
7. Turn fuel valve OFF to ensure no fuel spillage in travel.
8. Disconnect high and low pressure hoses and coil the assembly for safety and proper storage.

Hose Reel Brake Adjustment

The optional hose reel is equipped with an adjustable brake to prevent the hose from playing off the reel under its own weight. Tightening wingnut increases the drag on the reel, loosening decreases the drag. Adjust as desired. The brake only works in one direction (to resist hose moving off reel) (Figure 7).

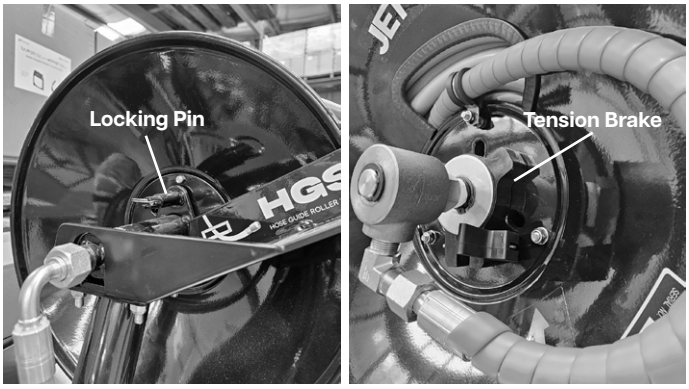

Figure.7 - Brake Adjustment & Locking Pin

Transportation and Storage

1. Turn off the fuel valve and the battery isolation switch.
2. Drain water from unit as needed.
3. Coil hoses and secure equipment appropriately. All loose material must be removed. Transport remote reel separate from unit.
4. Unit is equipped with wheels to allow transport over smooth level surfaces.
5. Unit weighs 55-80 (approx.) Use appropriate equipment and methods to load and transport.

Maintenance Instructions

⚠ WARNING

Before performing any maintenance, engine switch battery isolation switch should be in OFF position and spark plug wires should be disconnected to prevent inadvertent operation. Open water control valve to release any fluid pressure in system.

Always wear safety glasses and gloves when performing any maintenance to help protect against drain chemicals and bacteria.

Cleaning

The hose should be cleaned as needed with hot, soapy water and/or disinfectants. Do not allow water to enter the engine or electrical system. Do not clean with pressure washer. Wipe the unit down with a damp cloth.

Engine

Maintain the engine as directed in the engine operator's manual supplied with the unit.

Pump Lubrication/Maintenance

Check the pump oil level prior to each use. Place the unit on a level surface. Wipe any dirt and debris from the area of the dipstick and sight-glass. Oil level should be at the middle of the sight-glass (Figure 8). If needed, remove the dipstick and add SAE 15W-40 Mineral non-detergent oil, fill to half-way on the sight-glass. Do not overfill, reinstall dipstick.

Figure.8 - Checking Pump Oil Level

Change oil in pump after first 20 hours of operation and every 250 hours of operation after that or every 6 months. With the pump warm from operation, remove plug on bottom of pump and drain oil into suitable container. Replace plug. Fill to approximately half-way on the sight-glass with SAE 15W-40 Mineral non-detergent oil using the checking procedure.

At 1000 hours of use (less in severe use conditions) the Raptor G2 should be taken to a Jetwave Independent Service Center for pump seal and valve service.

Preparing Pump for Cold Weather Storage

If the unit will be stored under conditions where the temperature is near or below 0°C, the unit must be properly prepared. If water freezes in the pump, it can damage it.

After the tank is drained (if applicable), remove the hose from the water inlet. Open all valves in the system and use compressed air to force any water out of the system also flush device with anti-freezing agent to prevent freezing during cold weather storage.

Machine Storage

Store the unit in a well ventilated area protected from the weather elements. Keep the machine in a locked area that is out of reach of children and people unfamiliar with High Pressure Cleaners. This machine can cause serious injury in the hands of untrained users. See Maintenance section for information on cold weather storage. See engine operator's manual for specific information on engine storage.

Service And Repair

⚠ WARNING

Improper service or repair can make machine unsafe to operate.

The "Maintenance Instructions" will take care of most of the service needs of this machine. Any problems not addressed by this section should only be handled by an authorized Jetwave service technician.

High Pressure Cleaner should be taken to a Jetwave Independent Service Center or returned to the factory.

For information on your nearest Jetwave Independent Service Center or any service or repair questions:

- Contact your local Jetwave distributor.
- Visit jetwavegroup.com.au/find-a-dealer/ to find your local Jetwave contact point.
- Contact Jetwave Technical Service Department at service@jetwave.com.au or call +61 8 8371 3599

Disposal / Environmental Protection

Parts of the High Pressure Cleaner contain valuable materials and can be recycled. There are companies that specialize in recycling that may be found locally. Dispose of the components in compliance with all applicable regulations. Contact your local waste management authority for more information.

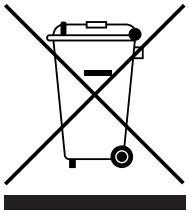

Please do not release engine oil, pump, petrol into the environment. Protect the ground and dispose of used oil in an environmentally-clean manner.

The packaging material can be recycled. Please do not throw the packaging material into household waste; please send it for recycling

Declaration of Conformity

We hereby declare that the machine described below complies with the relevant basic safety and health requirements of the EU Directives listed below, both in its basic design and construction as well as in the version put into circulation by us. This declaration shall cease to be valid if the machine is modified without our prior approval

Product: High pressure cleaner

Trade Name: Raptor G2

Relevant EU Directives
2006/42/EC
2000/14/EC

Relevant AS/NZS Directives
60335.5.2.79
4233.1:2013
4233.2:2013

Applied standards
EN 1829 -2

Applied conformity evaluation method
2000/14/EC: Appendix V
Sound power level dB(A)
Raptor G2
Measured: 105
Guaranteed: 107

The signatories act on behalf of and with the authority of the company management.

L. Seco
Business Director

Jetwave Group Pty Ltd
10-16 Smith Street, Thebarton 5031 SA, Australia
Tel: +61 8 8371 3599
Fax: +61 8 8371 4497
ACN: 056 759 892

Type		**Raptor G2 Jnr 200-11**	**Raptor G2 275-15**
Code		**CW3000-11PX-G2**	**CW4000-15P-G2**
Motor			
Honda Petrol		GX200, single cylinder, 4-stroke OHV	GX390, single cylinder, 4-stroke OHV
Maximum torque at 3600rpm	kW/HP	4.3 / 5.8	8.7 / 11.7
Operating Speed	RPM	3400	3400
Fuel Tank	L	3.1	6.1
Fuel	Type	Petrol, unleaded	Petrol, unleaded
Starting System	Type	Recoil	Recoil
Water Connection			
Max. feed temperature	°C / F	60 / 140	60 / 140
Min. feed volume	l/m (l/h)	12 / 720	16 / 960
Max. feed pressure	PSI (bar) MPa	101 / (7) / 0.7	101 / (7) / 0.7
Min. feed pressure	PSI (bar) MPa	4.35 / (0.3) / 0.03	4.35 / (0.3) / 0.03
Inlet hose diameter (min.)	Inch	1/2" / 15mm	1/2" / 15mm
Performance Data			
Working pressure	PSI / BAR / MPa	3000 / 200 / 20	4000 / 275 / 27.5
Max. excess operating pressure (safety valve)	PSI / BAR / MPa	3500 / 250 / 25	4350 / 300 / 30
Flow rate	l/m / l/h / gpm	11 / 660 / 3	15 / 900 / 4
Nozzle Size	Oriface	03	035
Type of protection	IP	IPX5	IPX5
Oil			
Pump oil quantity/type		Halfway on site glass / 15W-40	Halfway on site glass / 15W-40
Engine oil quantity/type	mL	600 / 10W-30	1100 / 10W-30
Dimensions & Weight			
Length x width x height	mm	760 x 585 x 900	815 x 635 x 985
Typical operating weight	kg	55	80
Values Determined as per AS/NZS 60335.2.79			
Max reaction/recoil force of trigger gun	N	36	58
Hand spray gun	m/s^2	-	-
Spray lance	m/s^2	-	-
Uncertainty K	m/s^2	-	-
Sound pressure level L_{pa}	dB(A)	92	95
Uncertainty K_{pa}	dB(A)	3	3.9
Sound Power Level L_{wa} + Uncertainty K_{wa}	dB(A)	100	107

Honda™ Petrol GX200 Engine Maintenance Schedule

Based on the 'Maintenance Schedule' in the Honda™ Engine Manual, always refer to the included manual for more in depth safety, maintenance and operation procedures of the engine.

Always use an approved Honda™ servicing agent who uses Genuine Honda parts in order to ensure full 3 year GX Honda warranty. Service records will need to be provided.

REGULAR SERVICE PERIOD[2] Perform at every indicated month or operating hour interval, whichever comes first. **ITEM**		Each Use	First Month or 20 Hrs	Every 3 Months or 50 Hrs	Every 6 Months or 100 Hrs	Every Year or 300 Hrs
Engine Oil	Check Level	O				
	Change		O		O	
Reduction Case Oil (applicable types)	Check Level	O				
	Change		O		O	
Air Cleaner	Check	O				
	Clean			O[1]	O*[1]	
	Replace					O**
Sediment Cup	Clean				O	
Spark Plug	Check-Adjust				O	
	Replace					O
Spark arrester (applicable types)	Clean				O	
Idle Speed	Check-Adjust					O
Valve Clarence	Check-Adjust					O
Combustion Chamber	Clean	After Every 500 Hrs				
Fuel Tank & Filter	Clean				O	
Fuel Tube	Check	Every 2 years (Replace if necessary)				

*Internal vent carburetor with dual element type only. Cyclone type every 6 months or 150 hours

**Replace paper element type only. Cyclone type every 2 years or 600 hours

1. Service more frequently when used in dusty areas.
2. For commercial use, log hours of operation to determine proper maintenance intervals

Honda™ Petrol GX390 Engine Maintenance Schedule

Based on the 'Maintenance Schedule' in the Honda™ Engine Manual, always refer to the included manual for more in depth safety, maintenance and operation procedures of the engine.

Always use an approved Honda™ servicing agent who uses Genuine Honda parts in order to ensure full 3 year GX Honda warranty. Service records will need to be provided.

REGULAR SERVICE PERIOD[2] Perform at every indicated month or operating hour interval, whichever comes first. **ITEM**		Each Use	First Month or 20 Hrs	Every 3 Months or 50 Hrs	Every 6 Months or 100 Hrs	Every Year or 300 Hrs
Engine Oil	Check Level	O				
	Change		O		O	
Reduction Case Oil (applicable types)	Check Level	O				
	Change		O		O	
Air Cleaner	Check	O				
	Clean			O[1]	O*[1]	
	Replace					O**
Sediment Cup	Clean				O	
Spark Plug	Check-Adjust				O	
	Replace					O
Spark arrester (applicable types)	Clean				O	
Idle Speed	Check-Adjust					O
Valve Clarence	Check-Adjust					O
Combustion Chamber	Clean	After Every 1000 Hrs				
Fuel Tank & Filter	Clean				O	
Fuel Tube	Check	Every 2 years (Replace if necessary)				

*Internal vent carburetor with dual element type only. Cyclone type every 6 months or 150 hours

**Replace paper element type only. Cyclone type every 2 years or 600 hours

1. Service more frequently when used in dusty areas.
2. For commercial use, log hours of operation to determine proper maintenance intervals

Jetwave™ High Pressure Cleaner & Water Jetting System Maintenance Schedule

Refer to the included manual for your high pressure cleaner or water jetting system for safety, pre-inspection, operation, shutdown and more procedures.

Always use an approved Jetwave™ servicing agent who uses Genuine Jetwave parts, to ensure full warranty coverage, service records will need to be provided.

		USER	SERVICE AGENT			
REGULAR SERVICE PERIOD[1] Perform at every indicated month or operating hour interval, whichever comes first. **ITEM**		Each Use	First 20 Hrs or First Month	Every 250 Hrs or 6 Months	Every 500 Hrs or 6 Months	Every 1000 Hrs or 1 Year
Pump	Check Oil Level	O				
	Replace Oil		O	O		
Pump Seal Kit[2] (If Leaking or down on pressure)	Replace				O	
Pump Valve Kit[2] (If down on pressure)	Replace				O	
Pump Conrods	Re-tension		O			O
Reduction Gearbox	Check Oil Level	O				
	Replace Oil		O	O		
Engine Key Way Shaft	Replace				O	
Inlet Water Filter[2] (Check for build up of debris)	Check/Clean	O				
	Replace				O	
Unloader Valve (Check for leaks & function)	Check		O	O		
	Replace				O	
Safety Valve (Check setting and check for leaks)	Check		O	O		
	Replace				O	
Hoses (Check for leaks)	Check	O				
	Replace				O	
Gun & Lance (Check for leaks)	Check	O				
	Replace				O	
High Pressure Nozzle (Check for blockage)	Check	O				
	Replace			O		
Couplings & 0-Rings (If Leaking or as needed)	Check	O				
	Replace				O	
Fuel Tank Level	Check Fuel Level	O				
Electrical Connections (Check for loose connections)	Check	O	O		O	
Battery (Check for loose connections)	Check	O				
	Replace					O

1. For commercial use, log hours of operation to determine proper maintenance intervals, The time indication for checks and replacement listed above, for units subject to normal operating conditions.
2. Subject to water quality used.

Trouble Shooting

FAULT	CAUSE	SOLUTION
Pump runs normally but pressure does not achieve rated value.	Pump is sucking air. Valves are worn or dirty. Unloader valve packing worn. Nozzle incorrect or worn. Worn piston packing. Dirty inlet filter.	Check that all hoses and fittings are airtight. Check, clean or replace. Check and replace. Check and replace. Check and replace. Check and clean.
Fluctuating pressure.	Valves dirty, worn or stuck. Pump sucking air. Worn piston packing. Dirty filter.	Check, clean or replace. Check that all hoses and fittings are airtight. Check and replace. Check and clean.
Presence of water in oil.	High humidity in air. Piston packing or oil seal worn. Water entering through breather.	Check and change oil twice as often. Check and replace.
Water dripping from pump.	Piston packing worn. Piston guide o-rings worn.	Check and replace. Check and replace.
Dripping oil.	Worn oil seals. Oil coming out of breather.	Check and replace. Pump oil level overfull.
Motor does not start when switched on	Plug not well connected or unreliable power supply. Earth leakage overload.	Check plug, cable and switch. Check earth leakage.

If the unit will not generate the rated pressure or is erratic

- Make sure the engine throttle is properly adjusted to the full open position.
- Turn unloader valve clockwise to increase pressure. Do not force.
- Inspect system for leaks. Use caution during inspection to prevent injury. If leaks are found, shut unit OFF before fixing.
- Ensure the front part lance with nozzle is connected.
- Turn the unit OFF. Check the inlet hose and filter and make sure that they clear of debris.
- Make sure there is adequate water flow to the unit.
- Turn the unit OFF. Remove the nozzle and clean the orifices with the a nozzle cleaning tool.
- Ensure correct nozzle orifice size is used and no signs of excessive wear are evident.
- Activate trigger and run the unit to remove air or debris from the system. Turn the unit OFF before removing or attaching the lance/nozzle.
- Assume a proper operating position.
- Be sure you can control the ON/OFF action of a water control valve. In case of emergency you must be able to turn off water flow.
- Be sure that you have good balance and do not have to overreach.
- You must be able to place one hand on the gun at all times to control and support the lance.

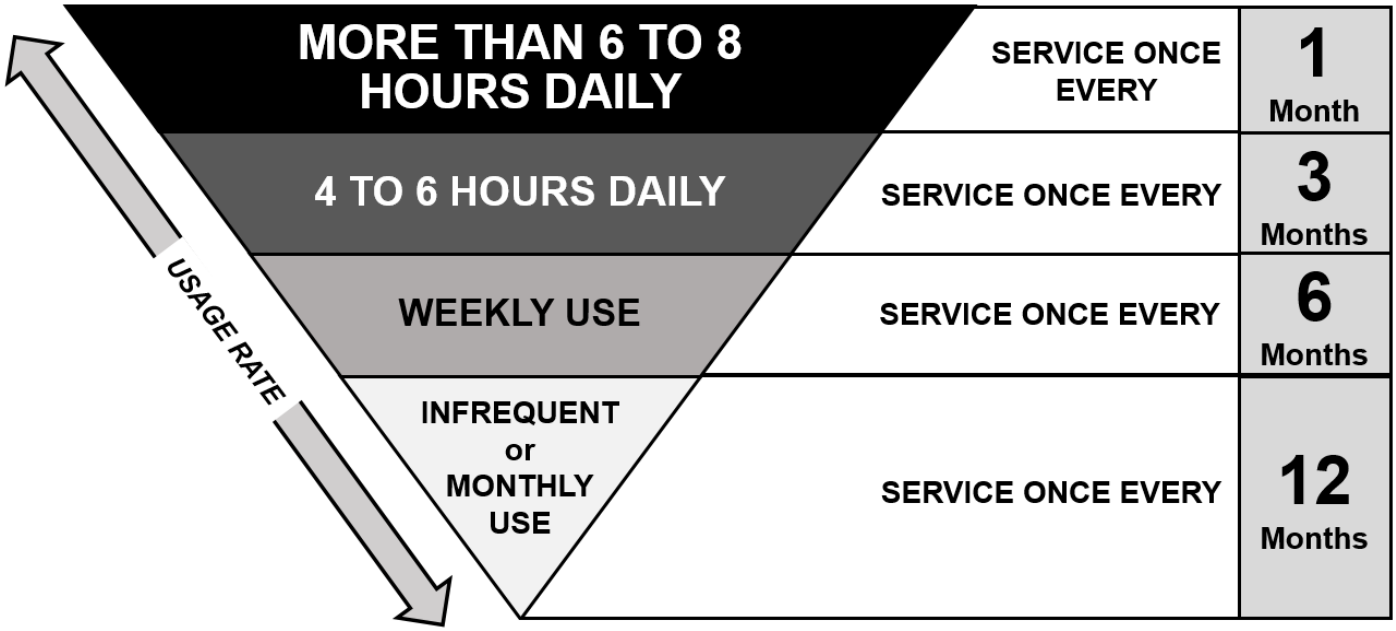

Time interval for checks and replacement listed above are for units subjected to normal operating conditions. Should the unit be subjected to abnormal conditions (eg heavy use, dirty water, extreme temperatures or conditions etc) times should be reduced accordingly.

Maintenance Log

Hour Meter Reading	Date	Maintenance Performed	Service Agent

Maintenance Log

Hour Meter Reading	Date	Maintenance Performed	Service Agent

JETWAVE GROUP

10-16 Smith Street, Thebarton, 5031
Adelaide, South Australia, AU
+61 8 8371 3599
info@jetwavegroup.com
jetwavegroup.com

jetwavegroup jetwave.group jetwavegroup jetwavegroup jetwave-group

Raptor G2 Manual

Copyright © 2025 Jetwave® Group Pty Ltd. All Rights Reserved.