HORNET™ G2

FRAME PARTS BREAKDOWN

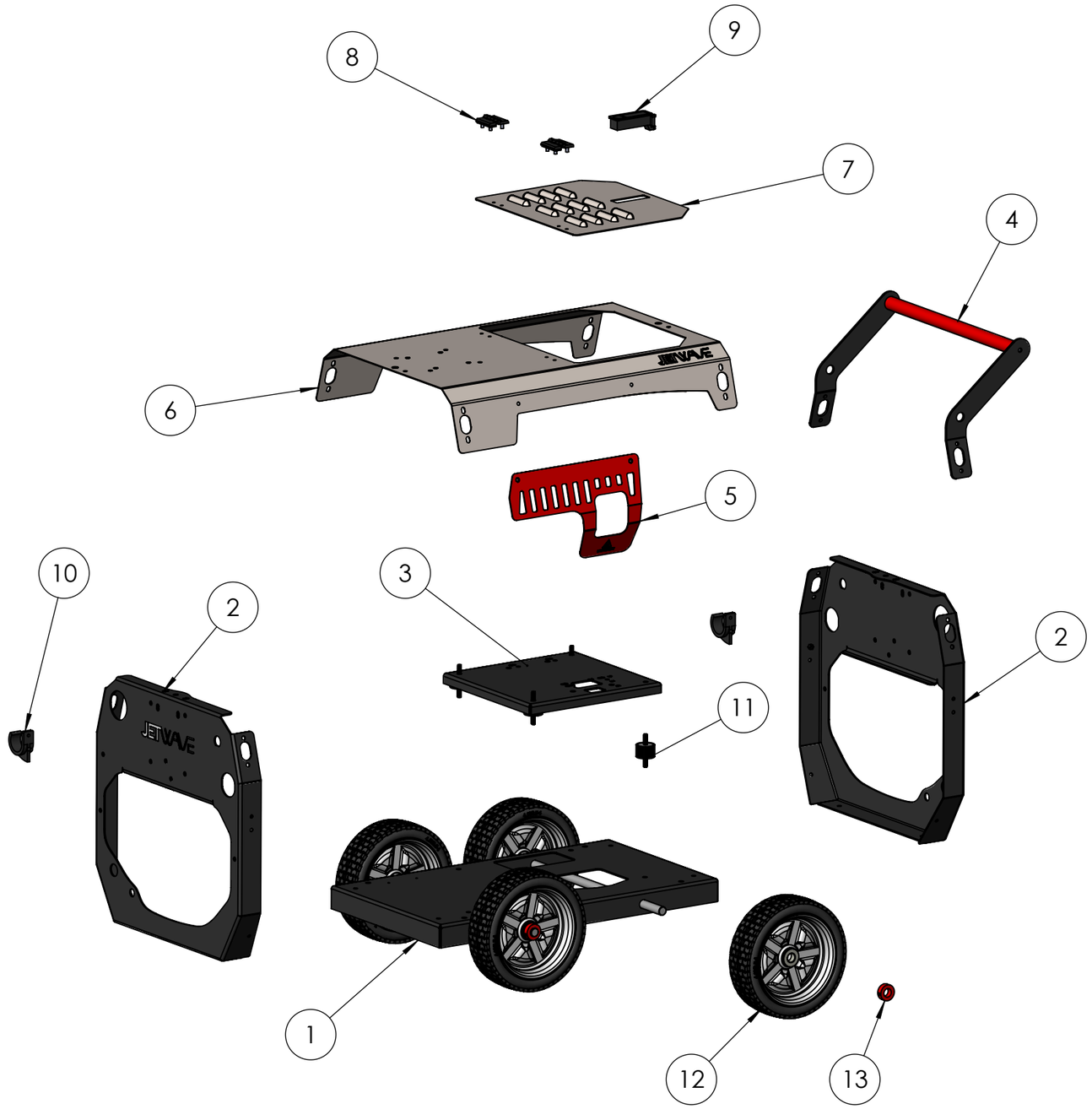

NUMBER	PART NO.	PART DESCRIPTION	QTY
1	**90005LG2-B-R6**	BASE	1
2	**90005LG2-MFF-R5**	MAIN FRAME FRONT & REAR	2
3	**90005LG2-MT-R4**	MOTOR TRAY	1
4	**90005LG2-HAND-ASSY-R1**	HANDLE ASSY	1
5	**SEN-SG-R8**	SIDE GUARD	1
6	**90005LG2-COV-R6**	COVER	1
7	**90005LG2-TAPP-R4**	TOP ACCESS PLATE PETROL	1
8	**5413032**	POLY HINGE	2
9	**HSJ003**	PUSH BUTTON LOCK LATCH	1
10	**4000085**	VIBRATION DAMPENERSPLASTIC HOOK FOR GUN/LANCE	2
11	**M10403070**	VIBRATION DAMPENERS	4
12	**DP80072**	WHEEL 10" LOW PROFILE SOLID	4
13	**DP-LOCK**	WHEEL LOCK (JWRED) GRUB SET SCREW	4

HORNET™ G2

GX390 MOTOR PARTS BREAKDOWN

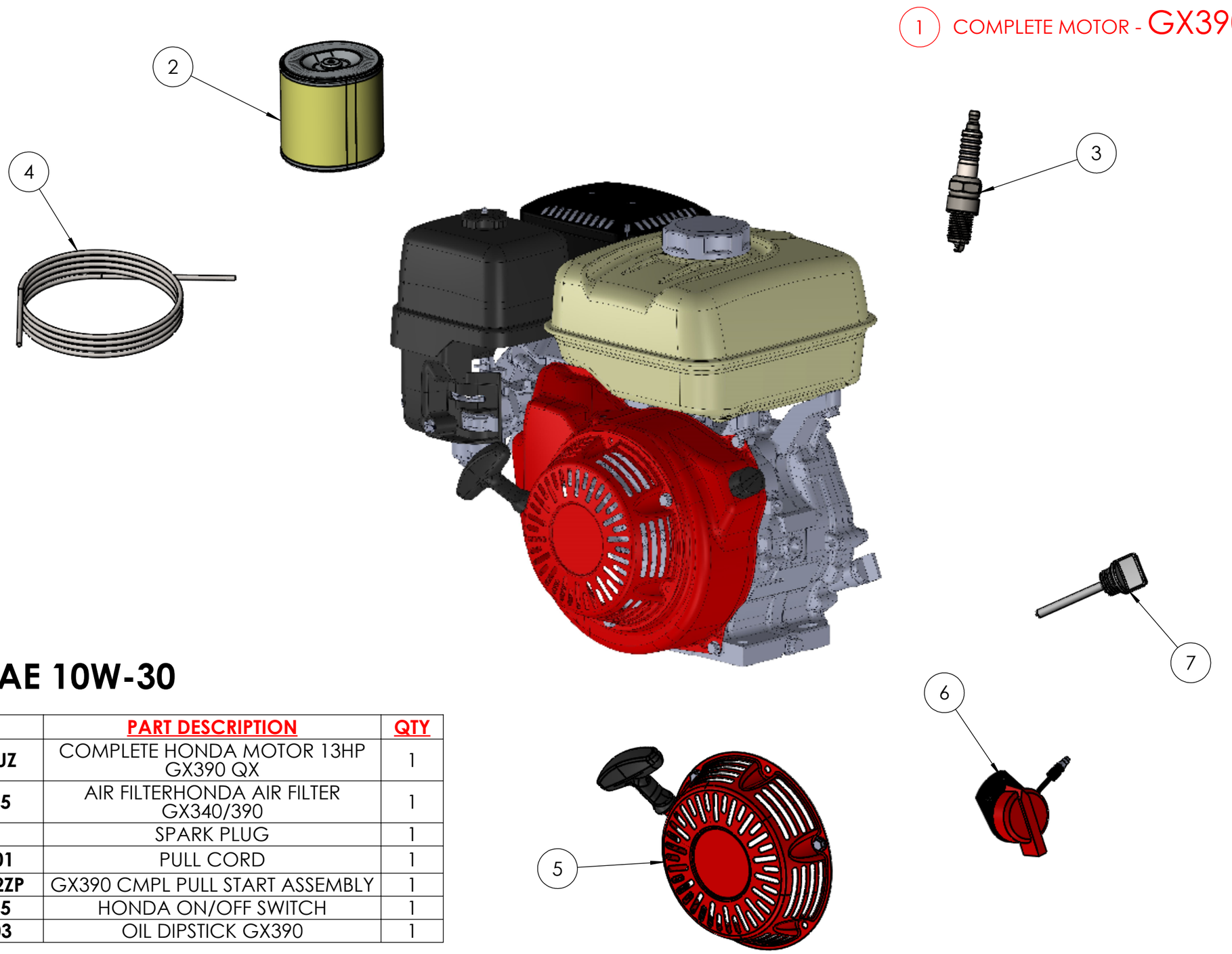

ENIGINE OIL - SAE 10W-30

NUMBER	PART NO.	PART DESCRIPTION	QTY
1	**GX390UT2QXUZ**	COMPLETE HONDA MOTOR 13HP GX390 QX	1
2	**17210-ZE3-505**	AIR FILTERHONDA AIR FILTER GX340/390	1
3	**BPR6ES**	SPARK PLUG	1
4	**28462-ZE3-W01**	PULL CORD	1
5	**28400-ZE3-W02ZP**	GX390 CMPL PULL START ASSEMBLY	1
6	**36100-ZE1-015**	HONDA ON/OFF SWITCH	1
7	**15600-735-003**	OIL DIPSTICK GX390	1

HORNET™ G2

QXE390 MOTOR PARTS BREAKDOWN

1 COMPLETE MOTOR - GX390UT2QXER

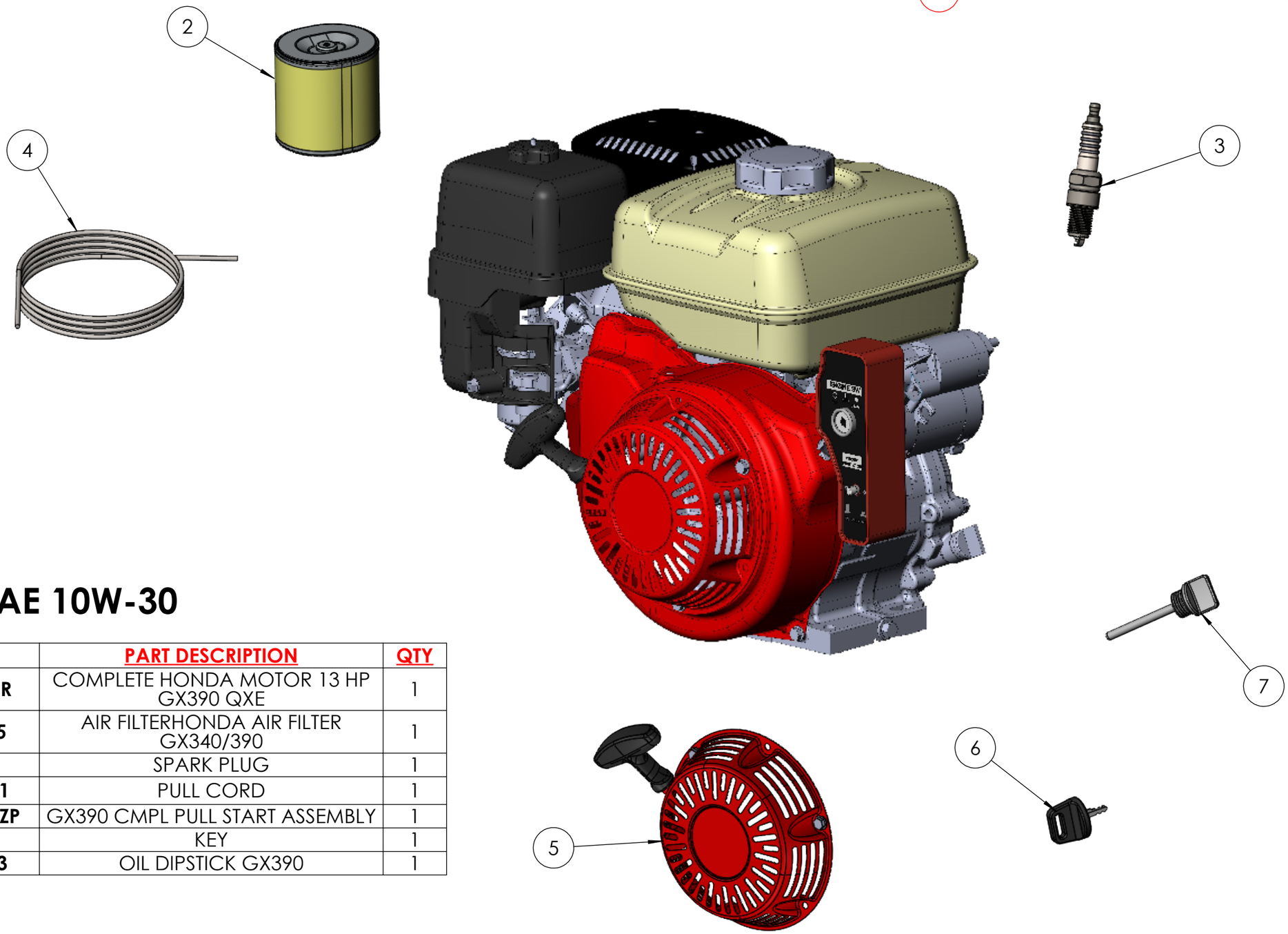

ENIGINE OIL - SAE 10W-30

NUMBER	PART NO.	PART DESCRIPTION	QTY
1	**GX390UT2QXER**	COMPLETE HONDA MOTOR 13 HP GX390 QXE	1
2	**17210-ZE3-505**	AIR FILTERHONDA AIR FILTER GX340/390	1
3	**BPR6ES**	SPARK PLUG	1
4	**28462-ZE3-W01**	PULL CORD	1
5	**28400-ZE3-W02ZP**	GX390 CMPL PULL START ASSEMBLY	1
6	**-**	KEY	1
7	**15600-735-003**	OIL DIPSTICK GX390	1

HORNET™ G2

IGX390 MOTOR PARTS BREAKDOWN

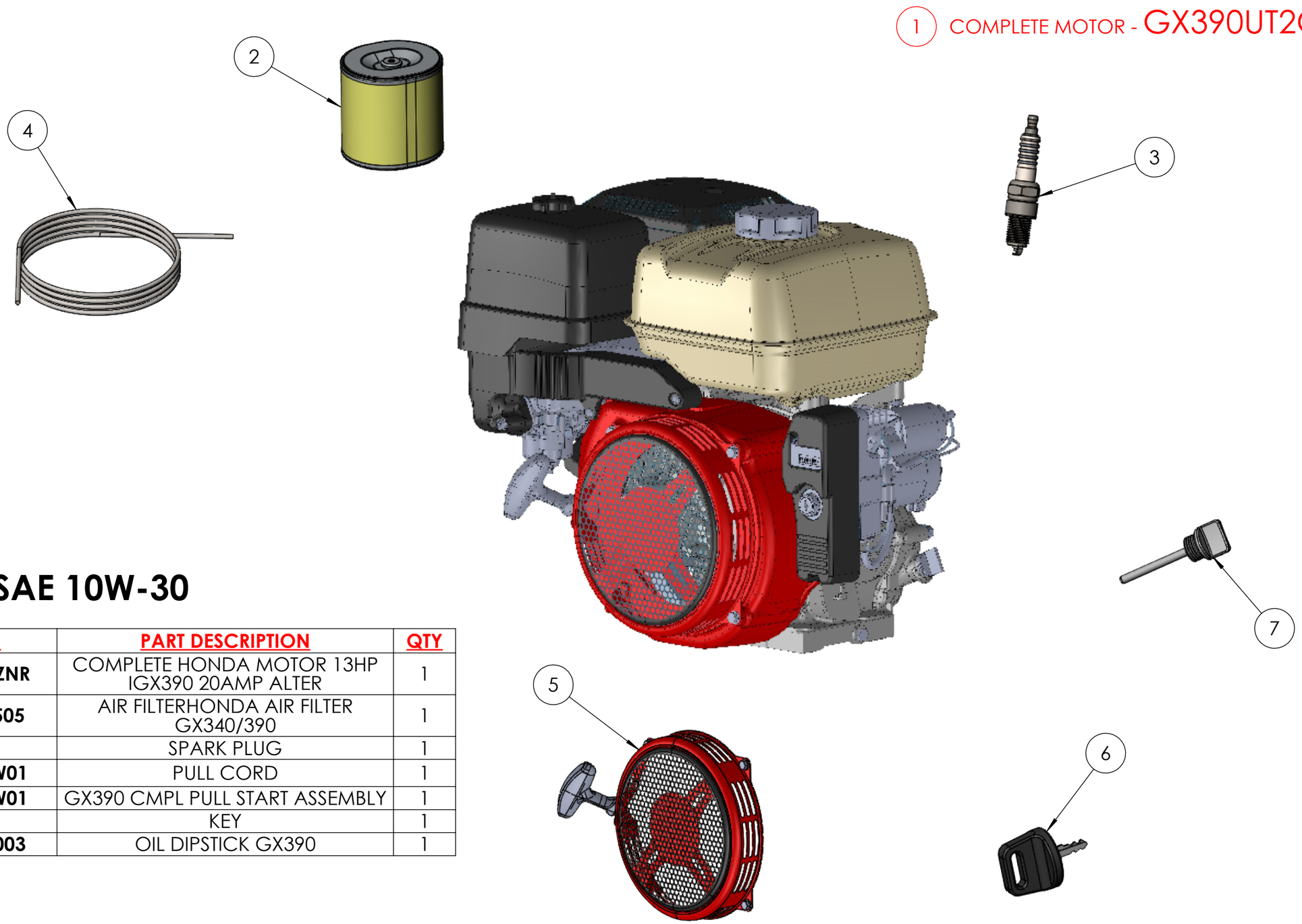

ENIGINE OIL - SAE 10W-30

NUMBER	PART NO.	PART DESCRIPTION	QTY
1	**GX390UT2QZNR**	COMPLETE HONDA MOTOR 13HP IGX390 20AMP ALTER	1
2	**17210-ZE3-505**	AIR FILTERHONDA AIR FILTER GX340/390	1
3	**BPR6ES**	SPARK PLUG	1
4	**28462-ZE3-W01**	PULL CORD	1
5	**28400-ZE3-W01**	GX390 CMPL PULL START ASSEMBLY	1
6	**-**	KEY	1
7	**15600-735-003**	OIL DIPSTICK GX390	1

HORNET™ G2

PUMP FITTINGS PARTS BREAKDOWN

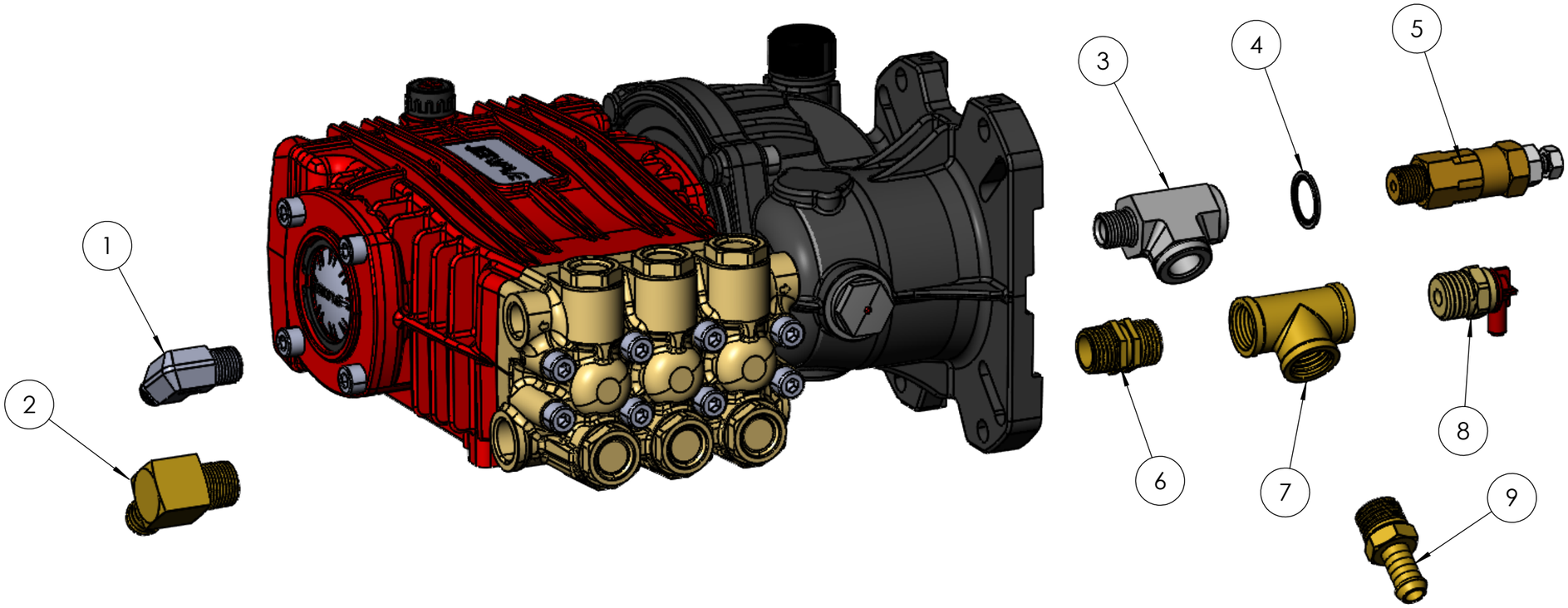

NUMBER	PART NO.	PART DESCRIPTION	QTY
1	**S49-0604**	SS304 ELBOW 3/8" BSPT M X 1/4" BSPT M	1
2	**06003-0808**	BR 1/2 TAIL 1/2 THREAD MALE	1
3	**S48-060606SS**	1/2 X 1/2 X 1/2 F/F/F TEE	1
4	**RL21D-06**	3/8" DOUTY SEAL	1
5	**60158000**	VS240 RELIEF VALVE 3/8M	1
6	**208315**	NIPPLE HEX BRASS 20mm	1
7	**209715**	1/2 X 1/2 X 1/2 F/F/F TEE	1
8	**60.0630.70**	VT6 THERMAL VALVE 1/2"	1
9	**06003-0808**	BR 1/2 TAIL 1/2 THREAD MALE	1

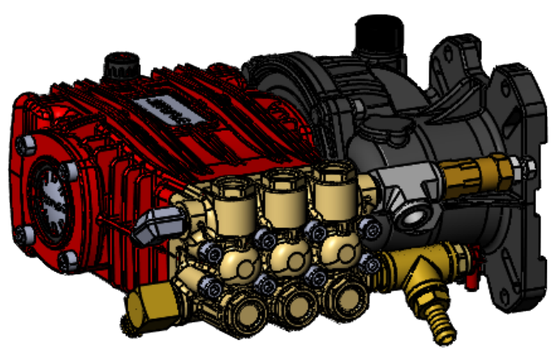

HORNET™ G2

JP21.21U3 3000-21 PUMP PARTS BREAKDOWN

PISTON FASTNER KIT

KIT 01206	
ITEM NO.	QTY
A1	3
A2	3
A3	3
A4	3
A5	3

WATER SEAL KIT

KIT 01028	
ITEM NO.	QTY
B1	3
B2	3
B3	3

VALVE KIT

KIT 01002	
ITEM NO.	QTY
C1	6
C2	6

BRASS RING KIT

KIT 01208	
ITEM NO.	QTY
D1	3
D2	3
D3	3

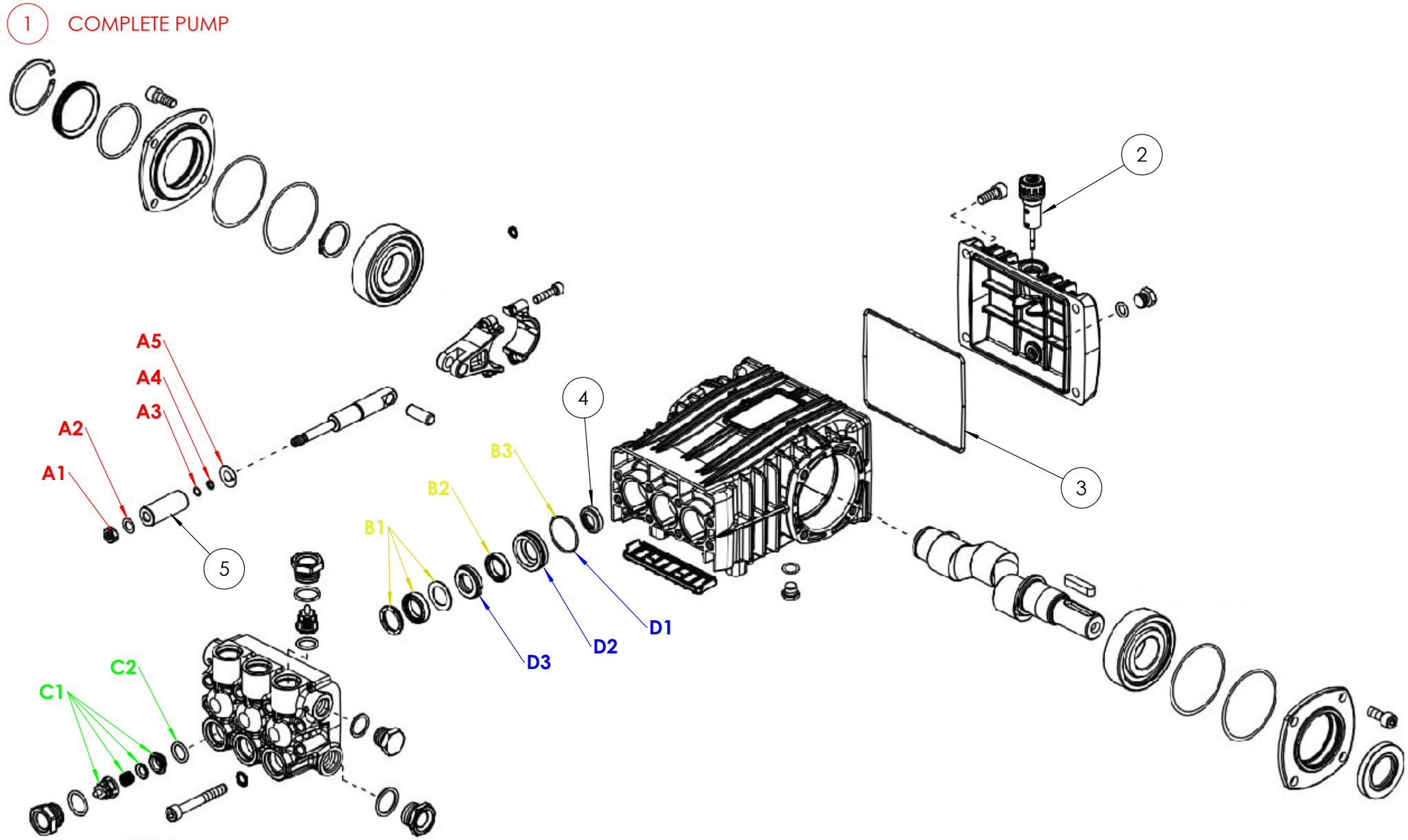

NUMBER	PART NO.	PART DESCRIPTION	QTY
1	**JP21.21U3**	COMPLETE PUMP	1
2	**162504**	OIL DIPSTICK	1
3	**1101N6**	GASKET	1
4	**000718**	OIL SEALS	3
5	**120571**	PISTONS	3

OIL TYPE - SAE15W40 - 250ml

HORNET™ G2

JP30.15U4 4060-15 PUMP PARTS BREAKDOWN

PISTON FASTNER KIT

KIT 01206	
ITEM NO.	QTY
A1	3
A2	3
A3	3
A4	3
A5	3

WATER SEAL KIT

KIT 01028	
ITEM NO.	QTY
B1	3
B2	3
B3	3

VALVE KIT

KIT 01030	
ITEM NO.	QTY
C1	6
C2	6

BRASS RING KIT

KIT 01208	
ITEM NO.	QTY
D1	3
D2	3
D3	3

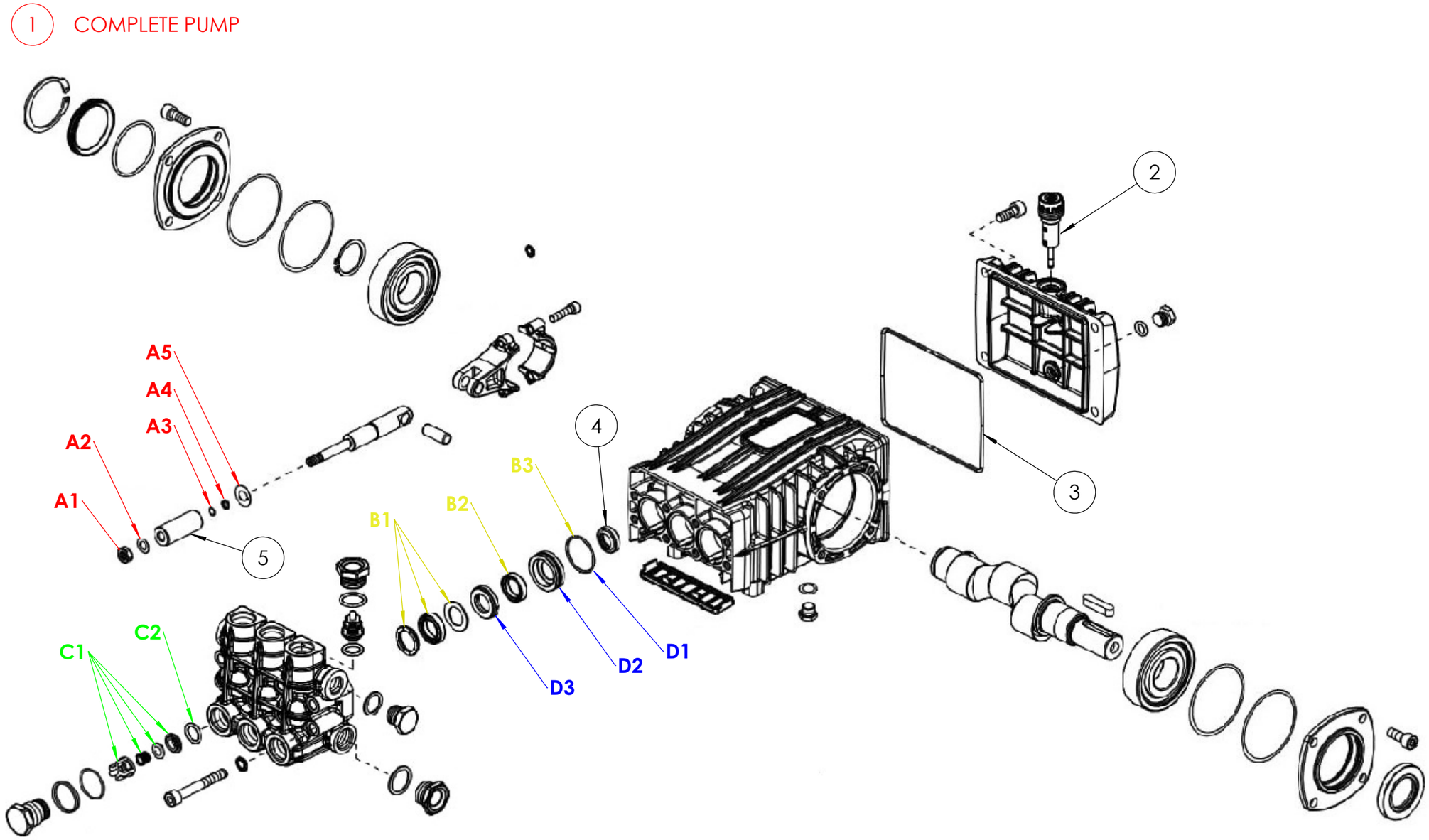

NUMBER	PART NO.	PART DESCRIPTION	QTY
1	**JP30.15U4**	COMPLETE PUMP	1
2	**162504**	OIL DIPSTICK	1
3	**1101N6**	GASKET	1
4	**000718**	OIL SEALS	3
5	**120571**	PISTONS	3

OIL TYPE - SAE15W40 - 250ml

HORNET™ G2

GEARBOX PARTS BREAKDOWN

1 COMPLETE GEARBOX ASSY

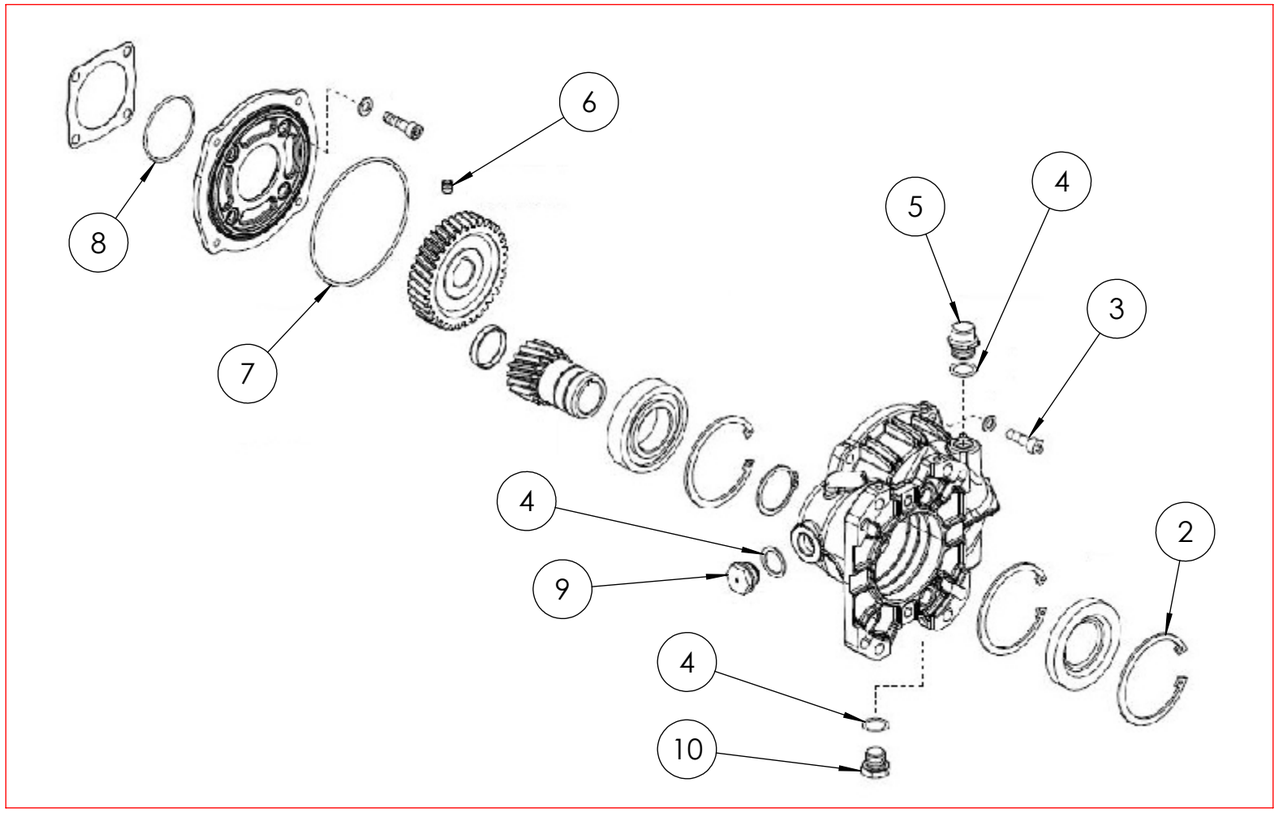

OIL TYPE - SAE80W90 - 300mL

NUMBER	PART NO.	PART DESCRIPTION	QTY
1	**JGB1.22HPURC**	REDUCTION GEARBOX UP TO 22HP 1" 25.4mm	1
2	**000787**	OIL SEAL	1
3	**180511**	GEARBOX BOLTS	4
4	**RL21D-08**	OIL PLUG O-RING	2
5	**1603M8**	OIL PLUG 1/2"	1
6	**061407**	GRUBSCREW	1
7	**110175**	GEARBOX LARGE O-RING	1
8	**1101D1**	GEARBOX SMALL O-RING	1
9	**1603M6**	SIGHT GLASS	1
10	**160362**	GEARBOX PLUG	1

HORNET™ G2

WATER FILTER PARTS BREAKDOWN

1 COMPLETE ASSY

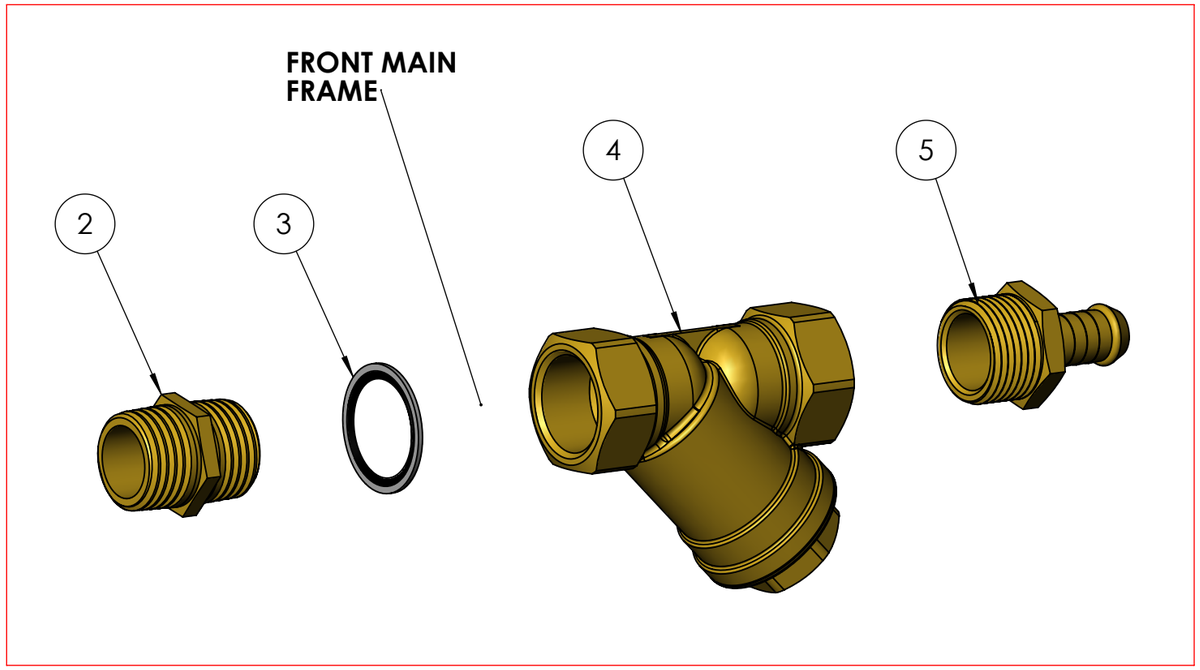

NUMBER	PART NO.	PART DESCRIPTION	QTY
1	**JWA-511**	COMPLETE ASSY	1
2	**208315**	NIPPLE HEX BRS (1/2")	1
3	**RL21D-12**	DOWTY SEAL 3/4 BSP STD	1
4	**23075-0808**	1/2 Y STRAINER BRS FF	1
5	**06003-0812**	BR 3/4 TAIL 1/2 THREAD MALE	1

HORNET™ G2

UNLOADER VALVE PART BREAKDOWN

7 COMPLETE UNLOADER ASSY

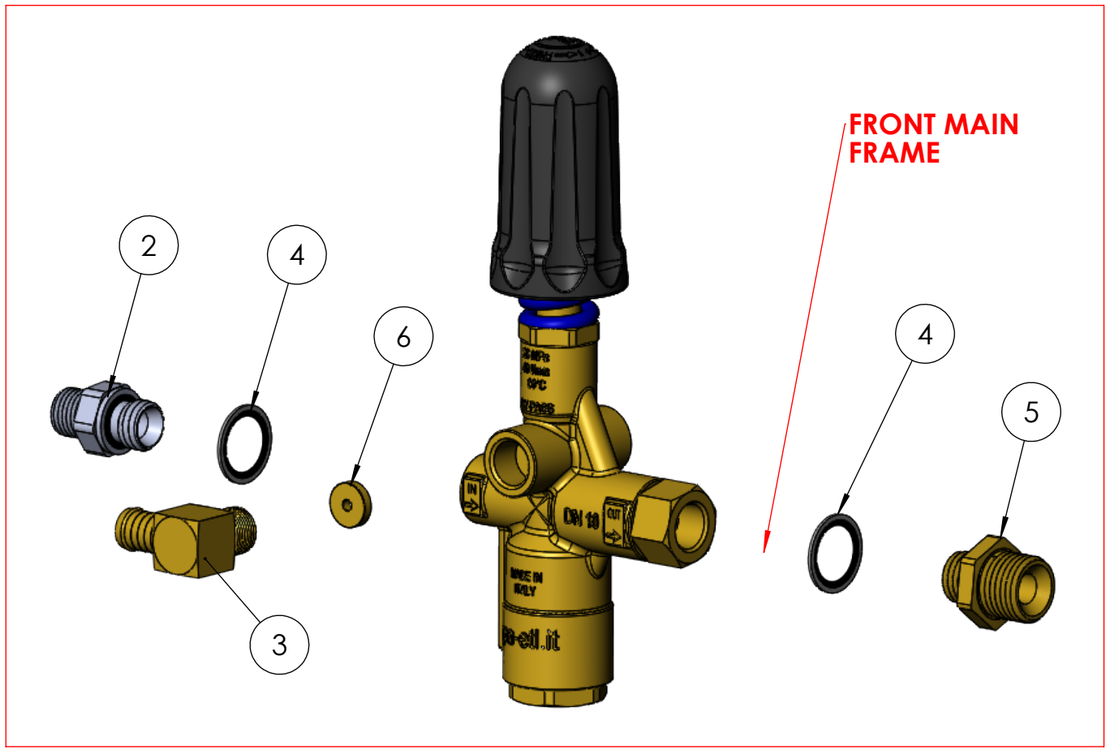

NUMBER	PART NO.	PART DESCRIPTION	QTY
1	**60240000**	PULSAR ZERO UNLOADER 3/8" F+KNOB	1
2	**S46-0606**	SS304 NIPPLE 3/8" BSPP M X 3/8" BSPP M	1
3	**06006-0806**	BR 1/2 TAIL 3/8" THREAD MALE ELBOW	1
4	**RL21D-06**	DOWTY SEAL 3/8" BSPP STD	1
5	**26003031**	NIPPLE A M22X1.5 3/8" BSP M	1
6	**60242331R**	RESTRICTOR 3.5mm	1
7	**JWA-504B**	COMPLETE UNLOADER ASSY	1

1 UNLOADER VALVE

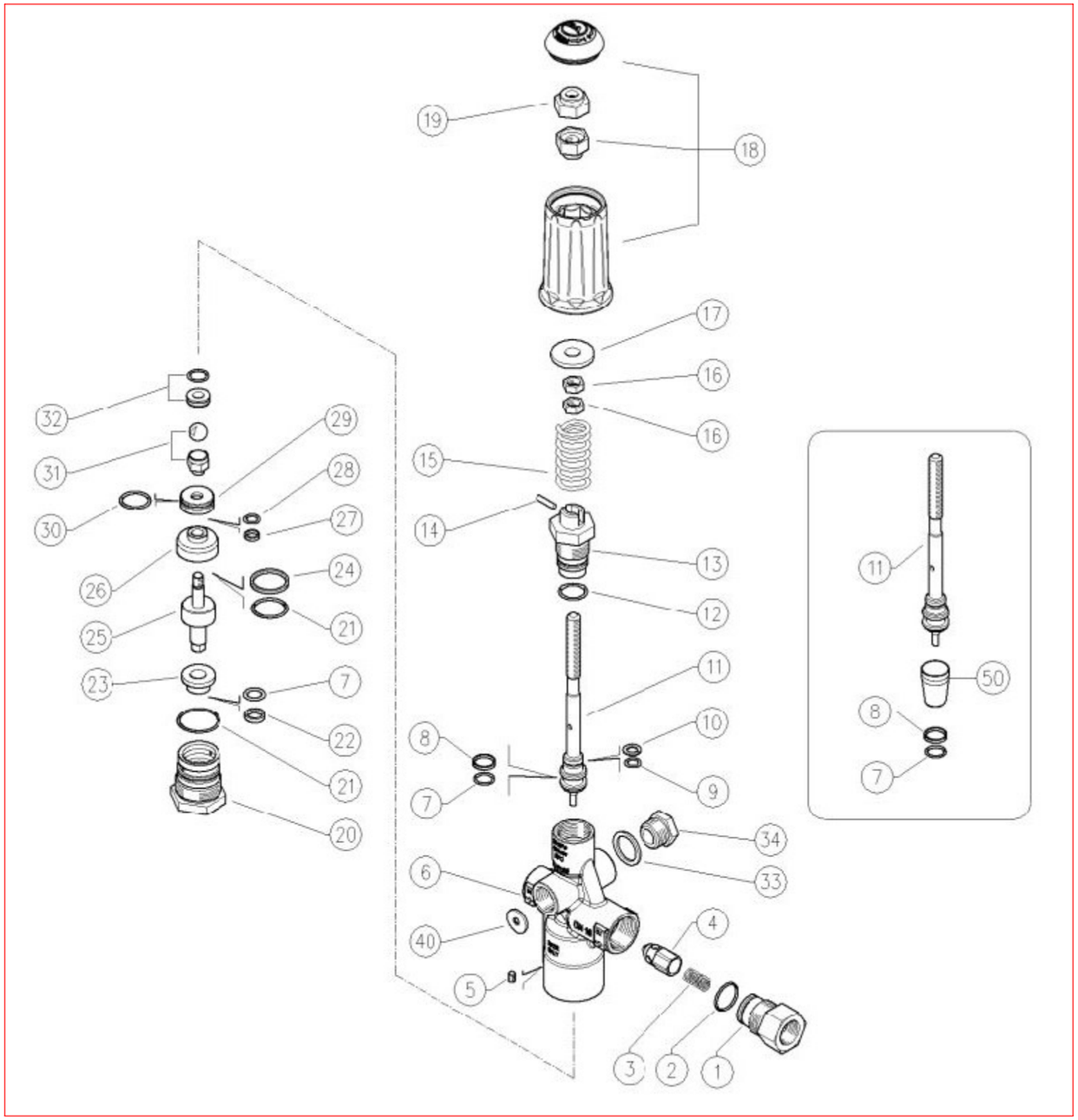

HORNET™ G2 FRONT COMPONENTS PARTS BREAKDOWN

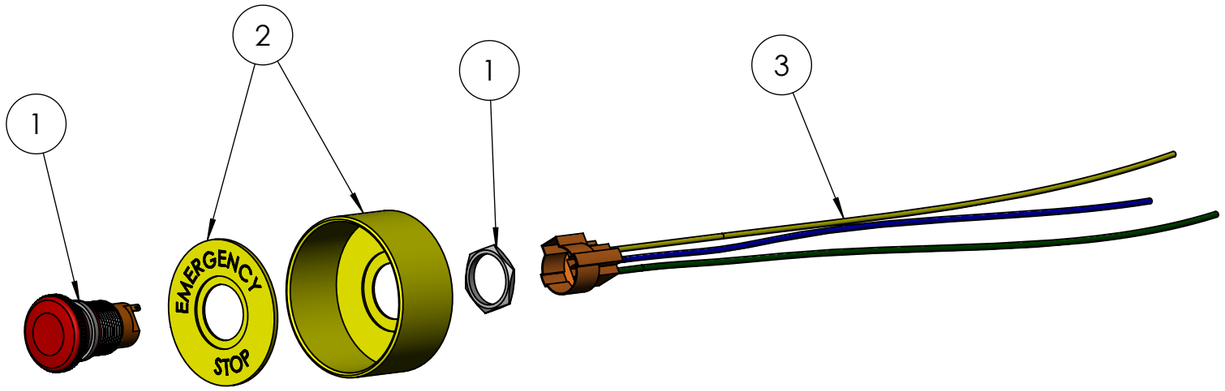

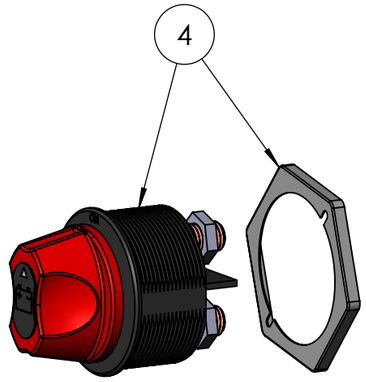

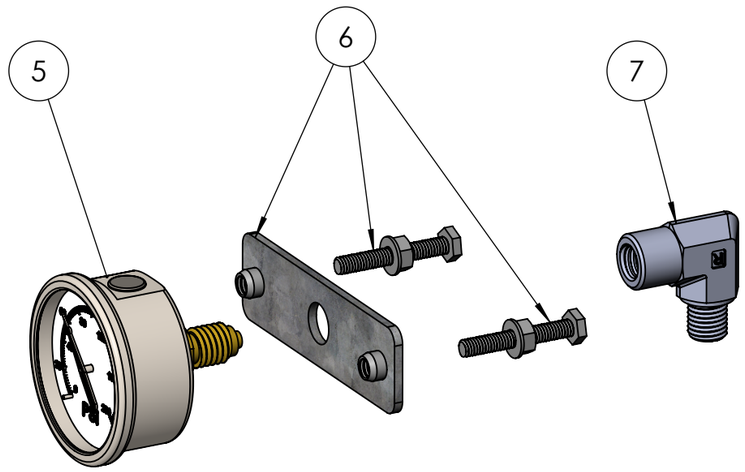

NUMBER	PART NO.	PART DESCRIPTION	QTY
1	**LB22M-JW**	S/STEEL 22mm JETWAVE EMERGENCY STOP BUTTON	1
2	**EM-60**	PROTECTIVE SHROUD - 22mm EMERGENCY STOP	1
3	**WPLB22M**	WIRE PLUG TO SUIT S/STEEL JW LB E/STOP	1
4	**75920-05BX**	BATTERY ISOLATOR SWITCH WITH KEY	1
5	**13003540**	PRESS GAUGE BACK ENTRY 1/4BSP 0-600	1
6	**JWBRAK-2**	GALV GAUGE BRACKET	3
7	**S25-0404**	CB54-0404 1/4 X 1/4 M/F ELBOW	1

HORNET™ G2

HOSES PARTS BREAKDOWN

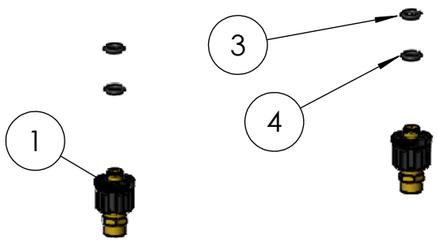

2 COMPLETE 15m HOSE

8 COMPLETE CHEM LINE

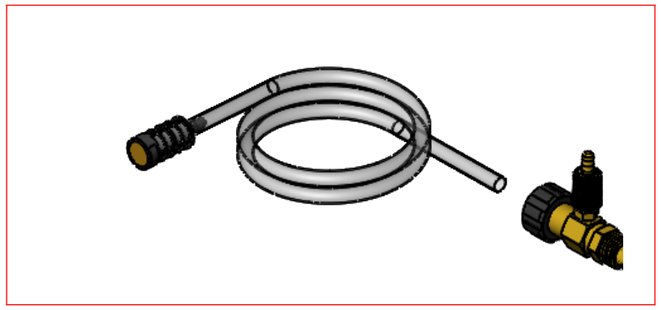

9 COMPLETE GAUGE HOSE

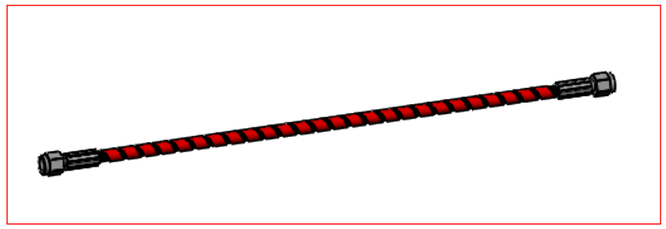

5 COMPLETE HIGH PRESSURE LEAD HOSE

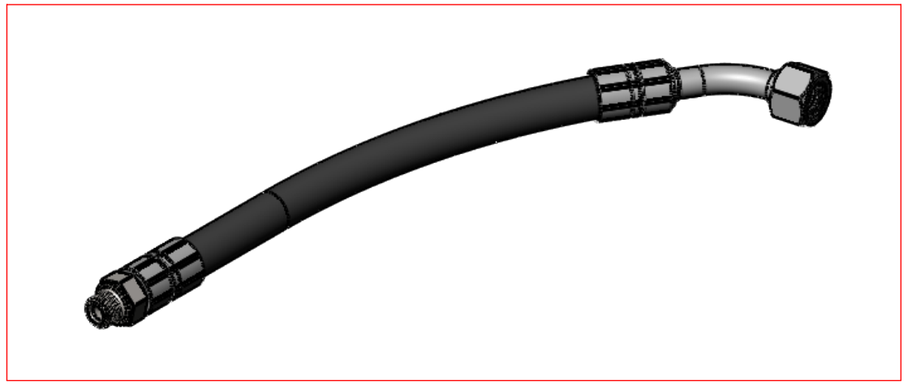

6 COMPLETE INLET HOSE

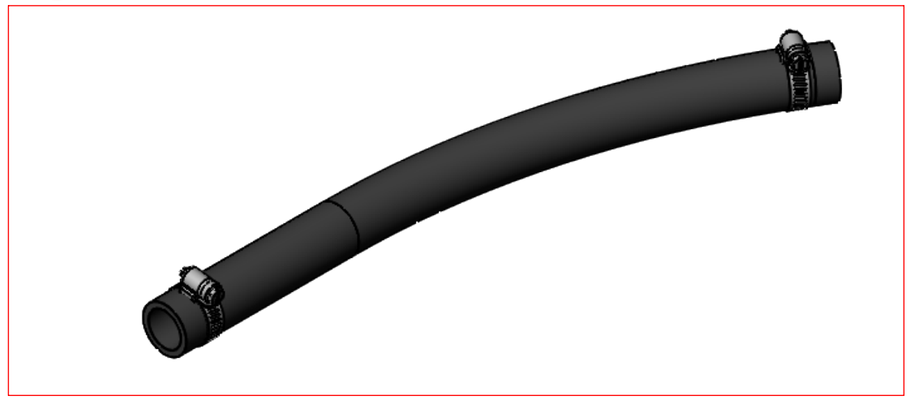

7 COMPLETE BYPASS HOSE

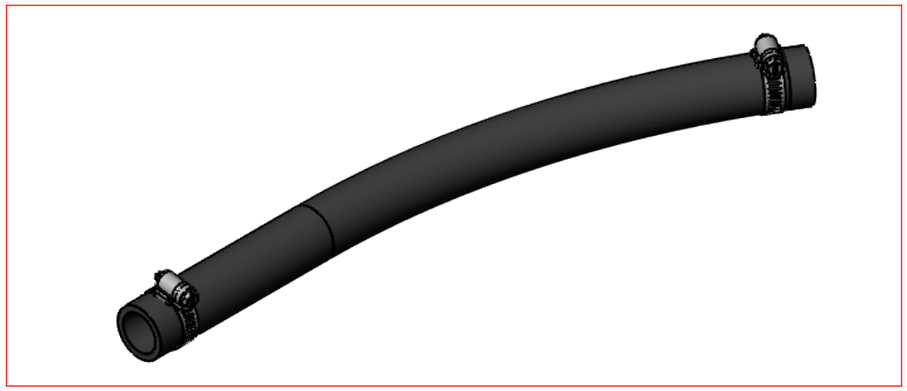

NUMBER	PART NO.	PART DESCRIPTION	QTY
1	**26025050**	3/8" QUICK COUPLING	2
2	**JWA017-SC**	COMPLETE 15m HOSE	1
3	**10310995**	O RING 2.4x9.3 VITON	2
4	**10401001**	BACK RING 13.9x10.2x1.2	2
5	**JWA-501A**	COMPLETE LEADER HOSE	1
6	**-**	COMPLETE INLET HOSE	1
7	**-**	COMPLETE BYPASS HOSE	1
8	**JWA-CHEM1**	COMPLETE CHEM LINE	1
9	**TPH-0450.1.28**	COMPLETE GAUGE HOSE	1

HORNET™ G2

BATTERY PARTS BREAKDOWN

*ELECTRIC START MODELS ONLY

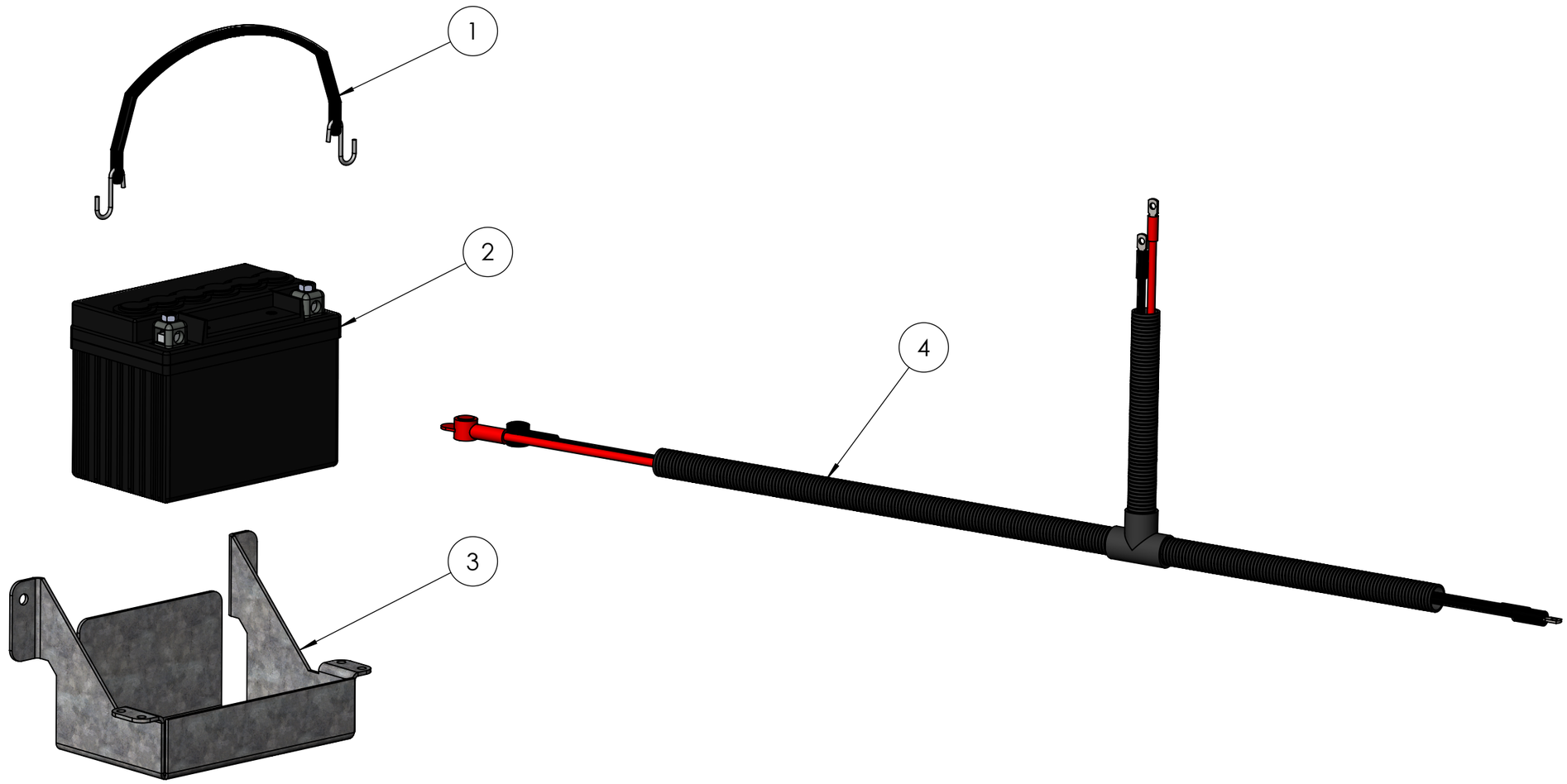

NUMBER	PART NO.	PART DESCRIPTION	QTY
1	**80039**	RUBBER BATTERY STRAP	1
2	**U1R-280**	DELKOR BATTERY 280CCA RIGHT POST	1
3	**90005LG2-BATCRAD-R4**	HORNET G2 FRAME BATTERY CRADLE	1
4	**HPHG2-LOOM**	HORNET G2 BATTERY LOOM	1

HORNET™ G2

GUN & LANCE PARTS BREAKDOWN

1 COMPLETE GUN

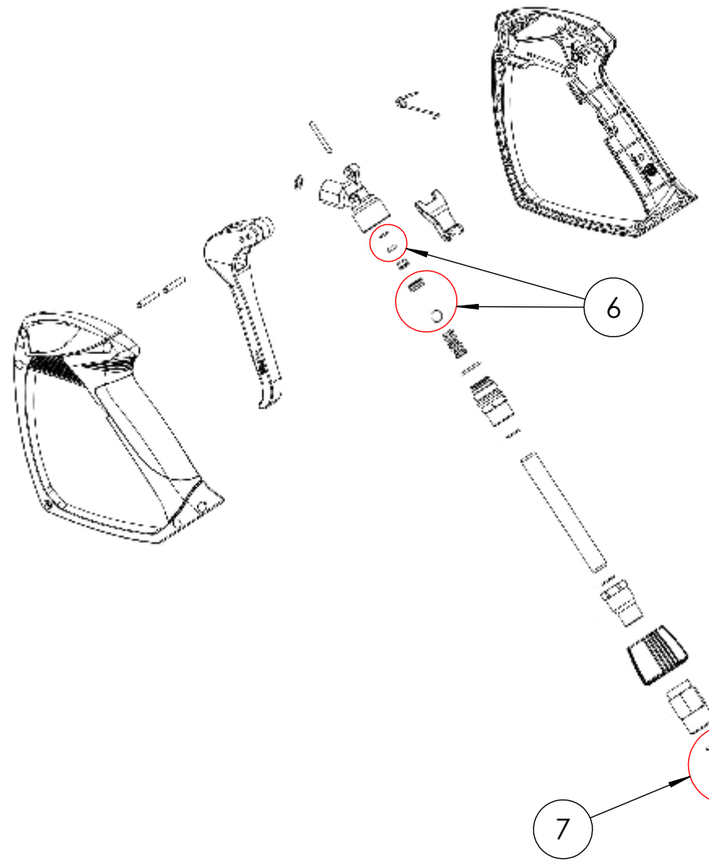

NUMBER	PART NO.	PART DESCRIPTION	QTY
1	**J5000**	J5000 DUROTECH GUN W/M22 SWIVEL	1
2	**41091900.04 - ASSY**	COMPLETE TWIN LANCE 4000/15	1
2	**41091900.06 - ASSY**	COMPLETE TWIN LANCE 3000/21	1
3	**41091900**	TWIN LANCE LD7 570mm 1/4 WITH NOZZLE PROTECTOR	1
4	**30130**	NOZZLE 1/4 LOW PRESSURE 40/30	1
5	**30104**	NOZZLE 1/4 LECHLER 15 04 4000/15	1
5	**30106**	NOZZLE 1/4 LECHLER 15 06 3000/21	1
6	**4019900011**	J5000 REPAIR KIT	1
7	**4019900012**	J5000 SWIVEL REPAIR KIT	1
8	**10310995**	O RING 2.4X9.3 VITON	1
9	**10401001**	BACK RING 13.9X10.2X1.2	1
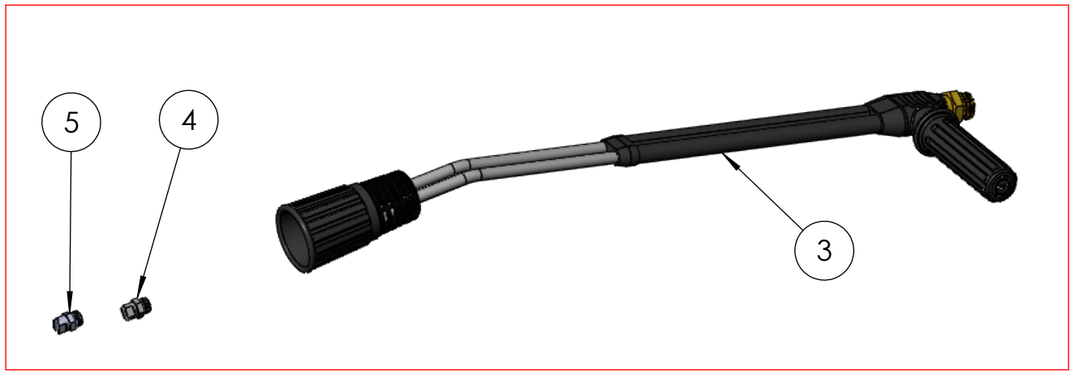
2 COMPLETE TWIN LANCE